DIEFFENBACHER

Product Catalog

Wood-based Panel Plants
Pellet Plants

Issue 2015

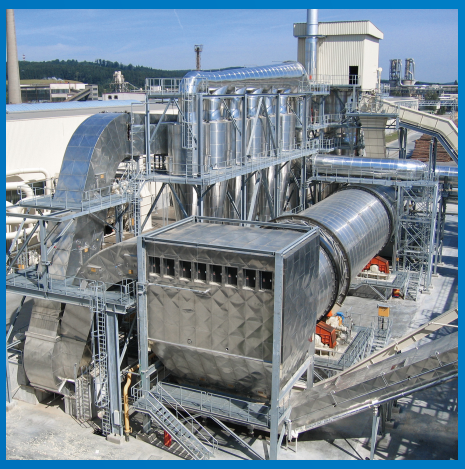

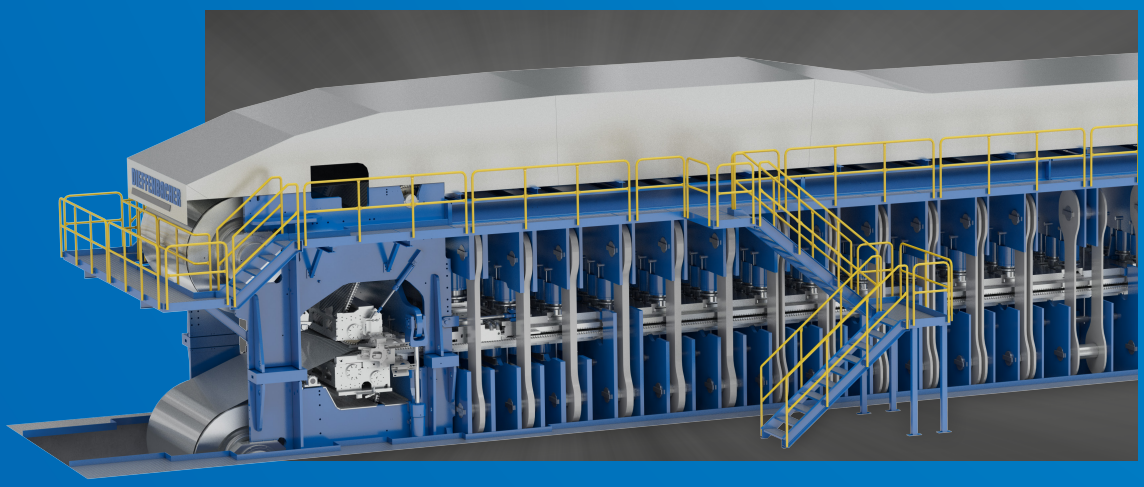

DIEFFENBACHER COMPANY LOCATIONS

GERMANY

DIEFFENBACHER GMBH
Maschinen- und Anlagenbau
Heilbronner Straße 20
75031 Eppingen, Germany
wood@dieffenbacher.com
Phone +49 7262 65-0

DIEFFENBACHER GMBH
Maschinen- und Anlagenbau
Branch Office Leverkusen
Maybachstraße 35
51381 Leverkusen, Germany
wood@dieffenbacher.com
Phone +49 2171 3996-0

B. MAIER
Zerkleinerungstechnik GmbH
Schweriner Straße 1
33605 Bielefeld, Germany
mzb@dieffenbacher.de
www.maier-dieffenbacher.de
Phone +49 521 584943-20

RUSSIA

DIEFFENBACHER Moscow
OOO Dieffenbacher
Barklay Street 6, Building 9
121087 Moscow, Russia
dieffenbacher@ttc-net.ru
Phone +7 495 215 22 57

FINLAND

DIEFFENBACHER PANELBOARD OY
Wipaktie 1
15560 Nastola, Finland
dpf@dieffenbacher.com
Phone +358 10 572 9000

SWEDEN

SUNDS MDF TECHNOLOGIES AB
Metropol, Universitetsallén 32
SE-851 71 Sundsvall, Sweden
info@sunds-mdf.com
Phone +46 60 524 200

USA

DIEFFENBACHER USA, Inc.
2000 McFarland 400 Blvd.
GA 30004 Alpharetta, USA
mail@dieffenbacher.com
Phone +1 770 226-6394

DIEFFENBACHER Customer Support, LLC
795 Branch Drive
GA 30004 Alpharetta, USA
service@dieffenbacher.com
Phone +1 770 663-4383

BRASIL

DIEFFENBACHER DO BRASIL
Construção de Máquinas e
Instalações Ltda.
Cyro Correia Pereira Street no. 667
Block 02-C
Neighborhood Cidade Industrial de
Curitiba
Curitiba, Paraná
Zip code 81.170-230, Brasil
service@inserco.com.br
Phone +55 41 3268 4205

INDIA

DIEFFENBACHER INDIA Pvt. Ltd.
703, 7th Floor | Brigade Rubix
No. 20, HMT Watch Factory Road |
Peenya 1st Stage
CIN: U51102KA2007FTC042326
560022 Bangalore, India
info@dieffenbacherindia.in
Phone +91 80 2972 3200

ASIA PACIFIC

DIEFFENBACHER ASIA PACIFIC
SDN. BHD.
Unit #11-02 11th Floor
Menara Multi-Purpose, Capital Square
No. 8 Jalan Munshi Abdullah
50100 Kuala Lumpur, Malaysia
dap@dieffenbacher.com.my
Phone +60 3 7490 0183

CHINA

SHANGHAI WOOD-BASED
PANEL MACHINERY CO., LTD
No. 299, Hejing Road, Anting
Shanghai 201805, P.R. China
swpm@swpm.cn
www.swpm.cn
Phone +8621 5957 7480

DIEFFENBACHER Machinery Services
(Beijing) Co., Ltd.
Scitech Tower, Unit 1305
22, Jianguomen Wai Dajie
100004 Beijing, P.R. China
dboklz@publicbta.net.cn
Phone +86 10 6522 0935

AUSTRALASIA

DIEFFENBACHER AUSTRALASIA
PTY. LTD.
PO Box 279, Lilydale
3140 Victoria, Australia
australia@dieffenbacher.com
Phone +61 3 9735 2537

www.dieffenbacher.com

ALLIANCES AND COOPERATIONS

GERMANY

HOLTEC GMBH & CO. KG
Anlagenbau zur Holzbearbeitung
Dommersbach 52
53940 Hellenthal, Germany
info@holtec.de
www.holtec.de
Phone +49 2482 82-0

DIEFFENBACHER
MASCHINENFABRIK GMBH
Gewerbestraße 29
75059 Zaisenhausen, Germany
info@dieffenbacher-zaisenhausen.de
www.dieffenbacher-zaisenhausen.de
Phone +49 7258 609-0

CANADA

KADANT CARMANAH DESIGN
Unit #8 15050 54A Avenue
Surrey BC Canada V3S 5X7
info.carmanah@kadant.com
www.kadantcarmanah.com
Phone +1 604 299 3431

DIEFFENBACHER

Innovation is in our Genes – since 1873

The Beginnings

Dieffenbacher was founded in 1873 by 26-year-old Jakob Dieffenbacher as a small machine shop that performed forging and fitting work to meet regional demands. Toward the end of the 19th century, it began to make its first series products, including cash boxes, safes, stoves, and ovens. Before the start of the First World War, his sons Wilhelm and Friedrich Dieffenbacher expanded the product range to include industrial goods. Driven by the flourishing agricultural industry, the company manufactured hydraulic oil and fruit presses. The brothers ensured the company made a swift recovery after the First World War and went on to expand their oil press business. In the 1920s and 1930s, Dieffenbacher made a name for itself both at home and abroad by supplying entire plants for processing edible oils.

Between the Wars

The brothers' courage and ingenuity saved Dieffenbacher from ruin during the global economic crisis in 1928. By developing new products both before and after the Second World War, they laid the foundations for the success that Dieffenbacher currently enjoys. In 1928, it marketed its first hydraulic Bakelite press for the plastics industry. The 1930s saw the introduction of the first multi-opening heating platen presses, which produced wood-based panels such as plywood.

1873
Founded by
Jakob Dieffenbacher

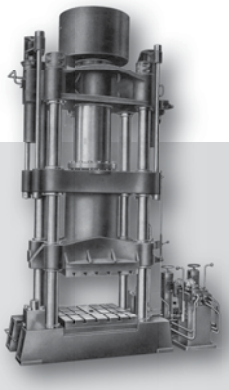

1928
First hydraulic
Bakelite press

1969
First complete
plant delivered

1873

1969

Around 1910
Hydraulic oil presses
and fruit presses

1954
First multi-opening press
delivered

German Economic Miracle

In the mid-1950s, the third generation of the family, Albert and Gerhard Dieffenbacher, took over the company. They soon celebrated their first successes with Bakelite presses and thermoplastic injection molding machines. They also developed their first metal presses for deep drawing and cold extrusion processes to the market. The 1960s saw a major boom in the wood sector. During this period, the company's recently added line of particle board presses along with its plywood and veneer presses lead to success in the export market. Due to concerns of an over-dependency on suppliers, a number of auxiliary products were developed, such as coating and decorative press systems, as well as laminating presses. Multi-opening and single-opening particle board presses became core products of Dieffenbacher.

Becoming a Global Player

In 1990, Dieffenbacher unveiled its first continuous press, heralding a new era for the company. Great grandson Wolf-Gerd Dieffenbacher turned the global press manufacturer into an international supplier of complete plants. Dieffenbacher rounded out its product range through company formations and strategic takeovers and now supplies complete plants for manufacturing wood-based panels to customers around the world.

Twenty-Five years after the first Continuous Press System was built, Dieffenbacher has completely redesigned and upgraded their CPS press in the new generation CPS+.

1990
First continuous press delivered

2008
First wood fiber insulation board plants

1990

2015

2007
First Dieffenbacher energy plants

2015
First CPS+

MDF plant,
Kastamonu Adana,
2012

OSB plant,
Pioneer OSB,
2015

PB plant, IKEA Industry Slovakia, 2013

Planning, Installing and Supporting Overall Plants

Over 1700 Dieffenbacher employees around the world work hand in hand in order to ensure your project is completed accurately and on schedule. Whether you are planning an entirely new plant or wish to modernize an existing plant, Dieffenbacher is your ideal partner. From initial advisory services to overall schedule planning, including financing, our teams of experienced experts and project managers can offer you complete system concepts to secure your investment.

Plant Planning

Our 3D plant planning tools give us planning security and enable us to examine a complete plant even before work starts.

Installation and Site Supervision

Our construction site teams have experienced working in many different cultures. Whether in the Siberian tundra or in the subtropical rain forest, they keep a cool head at all times, even under time pressure and tough conditions.

Start-up

We will continue to support you even after the First Board is produced. The project manager will only hand the plant over to you once our technicians have finished optimizing it for continuous operation.

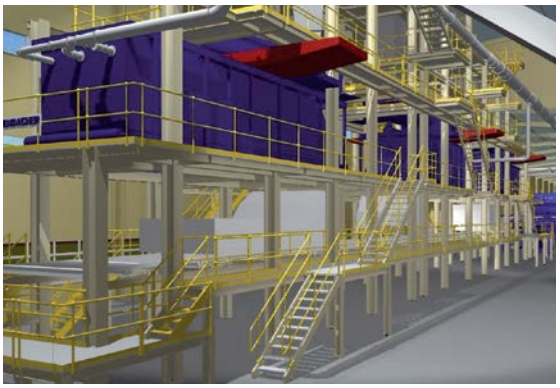

Forming station in an OSB plant from planning ...

... to reality

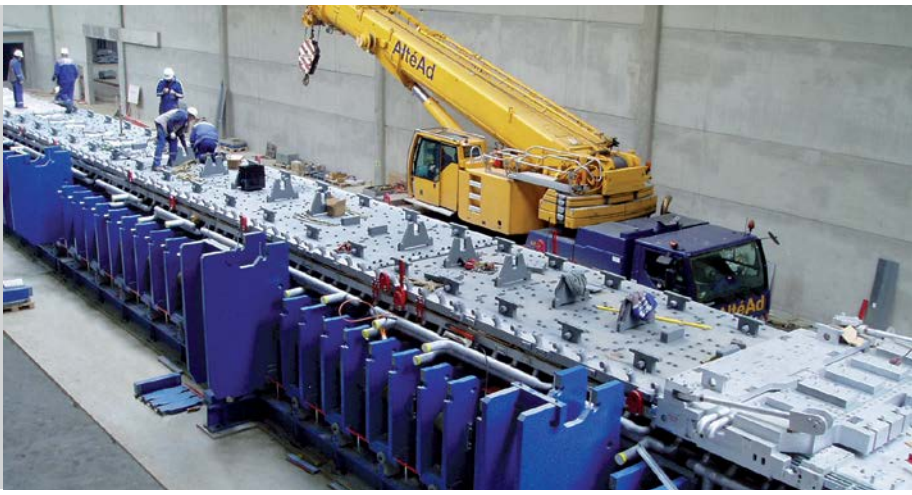

Research and Development to Reduce Production Costs

By investing heavily in research and development, we drive the continuous development of new, innovative solutions in panel production. Each machine we deliver also provides valuable experience that is used to support the ongoing refinement of our well-proven technology. Our central product development department works closely with research centers and customers to test alternative materials, research new methods and analyze and adopt technologies from other industrial sectors.

Production costs **prior** to optimization

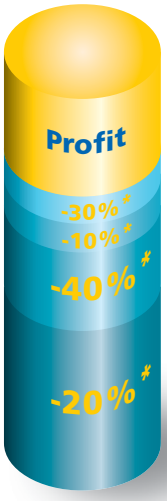

Production costs **after** optimization

* Savings are based on our experience of various customer plants and can vary with the general circumstances of each case.

Guide Reducing Costs

Energy generation
- **Energy generation with combined heat and power**
- **Use of biomass**

Automation
- **Modern automation systems**

Gluing
- **EVOjet M**
- **EVOjet P**
- **PROjet**

Wood
- **Lightweight panel technology**
- **Use of recycled wood**

Forming line
- **Spreading concepts that save on materials**
- **Integrated test instrumentation**

Presses
- **CPS+ with minimal tolerances**
- **CPS+ for lightweight panels**

DIEFFENBACHER GMBH
Maschinen- und Anlagenbau
Heilbronner Straße 20
75031 Eppingen, Germany
Phone +49 7262 65-0
wood@dieffenbacher.com
www.dieffenbacher.com

DIEFFENBACHER

LOGYARD*Alliance*

DIEFFENBACHER HOLTEC

Professional Solutions for OSB, MDF, PB and Pellet Plants

Through the "Logyard Alliance" with Holtec, Dieffenbacher has expanded its product range and now offers a complete wood-based panel plant from log to the finished product. Holtec, a well known supplier of logyards, works closely with Dieffenbacher to design, manufacture and install logyards for OSB, particleboard, pellet and MDF plants that are tailored to the customer's requirements. This includes the debarking, log conditioning system, OSB strander or chipper right through to the waste disposal system. Everything can be manufactured and supplied from a single source.

For over 40 years log processing has been a way of life for Holtec. Holtec has the knowledge and experience of designing, manufacturing and installing of over 250 logyard systems.

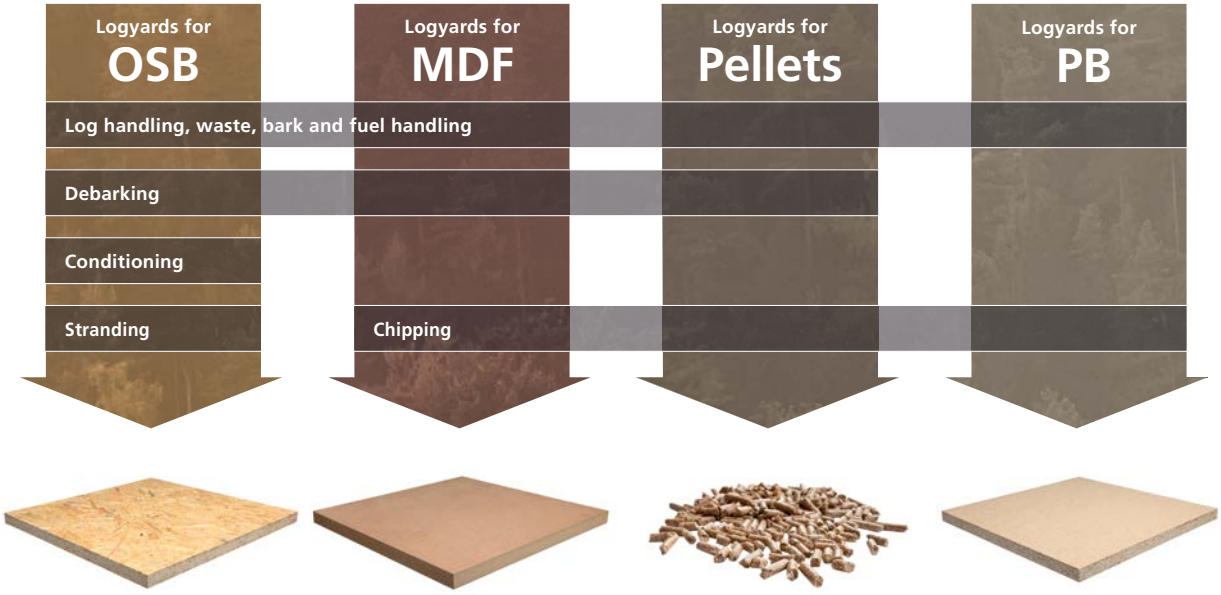

Log handling

For the last ten years Holtec has designed and manufactured the Solid Plus Line for the high-performance 24 hour 7 days per week tough industrial operations. Solid Plus is the premium product for the wood-based panel industry (PB/MDF/OSB/Pellets). Holtec's strength lays in the complete design of unique applications and tailored to our customers' needs. From the chipper infeed to the complete OSB logyard including foundation design and the site safety requirements.

Waste / Bark / Fuel handling

Seems to be marginal and is often disregarded. Adapted for the application, a well-designed waste conveyor system makes money. We provide options for the waste conveyors with chain or belt conveyors with metal detection.

Debarking

One of the most critical areas is the debarking process. Efficient debarking with minimum fiber loss is of great importance in the log debarking process. With our log handling experience of more than 10 years in the wood-based panel industry a new adjustable debarking machine was designed and manufactured.
The VARIO BARKER has the variable features to ensure quality debarking. It debarks the logs efficiently in all different conditions.

Conditioning

For producing a high quality strand the de-icing of logs in very cold regions is necessary. In the veneer industry the logs have to be conditioned before the peeling process, and in the OSB industry log conditioning is also required prior to flaking. With the SmartConditioning technology the logs are de-iced by an overspray of hot water as the logs are transported through by cross-conveyors.

Chipping

As chipper infeed conveyors are required to perform in very tough conditions, they have to be tough and hardened to handle the heavy impact loads and abrasive wear conditions. Holtec exceeds these requirements: longitudinal conveyors designed as rugged belt conveyors or for especially rough conditions heavy-duty chain conveyors. Integrating of cross-conveyors and vibrating tables is also possible.

Flaking

OSB is a complex process requiring a continuous integration of all machines and systems. Holtec's knowledge in log handling has resulted in more than ten flaker systems for OSB production. For the flaker infeed, cranes or the proven pocket loader system can be used. Nine out of ten European OSB mills trust Holtec's technology.

DIEFFENBACHER GMBH
Maschinen- und Anlagenbau
Heilbronner Straße 20
75031 Eppingen, Germany
Phone +49 7262 65-0
wood@dieffenbacher.com
www.dieffenbacher.com

HOLTEC GmbH & Co. KG
Anlagenbau zur Holzbearbeitung
Dommersbach 52
53940 Hellenthal, Germany
Phone +49 2482 82-0
info@holtec.de, www.holtec.de

LOGYARDAlliance
DIEFFENBACHER HOLTEC



Wood Yard Technology

Application

- Panel board industry (PB, MDF, OSB)
- Biomass and renewable fuels
- Pellet and briquette industry
- WPC/WFC industry
- Recycling industry
- Pulp and paper industry

Description

MAIER wood yard technology is based on the latest requirements for effective and flexible management of wood resources. The product range comprises mechanical storage, dosing and conveying systems which are combined in tailor-made solutions for effective handling for all kind of wood assortments.

Customer benefits

- Free choice of wood species: round wood, slabs and offcuts, short logs, sawmill residues, industrial waste wood and reclaimed timber
- High capacities up to 160 t/h b.d.
- Designed for rough applications and heavy duty loads
- Low operation costs due to solid, reliable execution for high uptime
- Low maintenance and service friendly

SCC Storage Cross Chain Conveyor
for storing and conveying round wood and slab bundles, loaded by crane. The conveyor is designed with closed bottom plate and integrated driven chains.

LS Log Singularizer

mounted downstream the SCC, separates the logs by inclined installation and increased conveying speed.

SBS Slab Bundle Singularizer
executed as movable table, mounted underneath the SCC. The bundles can easily be opened in extended table position. The loosen slabs are fed to the line by retracting the table.

DPC Dumping Pit Chain Scraper
for direct loading of wooden bulk materials by front loader or truck. The DPC acts as a buffer and equalizes bulk material flow by an inclined section.

VFC Vibration Feeding Conveyor
for continuous dosed conveying of different bulk materials. The material is usually loaded by front loader, crane or pre-feeder.

VDT Vibration Dosing Table

acts as a buffer and equalizes bulk material flow. The material is usually loaded by front loader or truck.

FBC Feeding Belt Conveyor

for continuous transport of logs and other wooden materials. The material is usually loaded by crane, pre-feeder or cross-feeder.

SPC Steel Plate Conveyor

for continuous transport of heavy-weight logs and other materials. The material is usually loaded by crane, pre-feeder or cross-feeder. The conveyor is executed with driven chains with specially formed reinforced steel plates.

B. MAIER Zerkleinerungstechnik GmbH
Dieffenbacher Group
Schweriner Straße 1
33605 Bielefeld, Germany
Phone +49 521 584943-20
mzb@dieffenbacher.de
www.maier-dieffenbacher.de

Sales Department
Phone +49 521 584943-40
Service and Spare Parts
Phone +49 521 584943-80

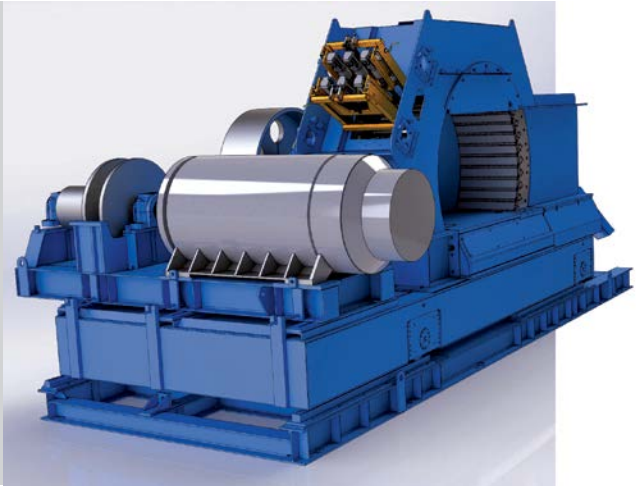

SmartRING Stranders

Dieffenbacher and Kadant Carmanah Design signed a cooperation agreement in 2013 for the supply of disc and ring stranding systems to engineered wood applications outside of North America.
The strander division of Kadant (formerly Carmanah), celebrating its 100th year in business in 2013, is the world leader in the supply of disc and ring stranders to the engineered wood industry with installations in North and South America, Europe, the UK, and New Zealand.

Application

Production of flakes/strands for the production of engineered wood products including OSB, OSL etc.

Description

The SmartRING Strander produces high quality and consistent strands and is designed for easy adjustment of strand parameters. Maintenance is straightforward and wear components easily replaced to ensure downtime is minimized. Additionally, several features contained in the SmartRING platform, monitor knife installation and subsequently during operation identify issues, and, if necessary, act to minimize the potential of serious machine damage or catastrophic failure.

Customer benefits

- Consistent strand quality through real-time adjustment to forward ring velocity
- Wear components quickly and easily replaced as required
- Knife change procedure automated through nutrunner system
- Option to utilize disposable knives to achieve multiple benefits
- Safety features minimize the potential of serious machine failure

Technical features

- Real-time ring RPM monitor to adjust forward ring velocity during cutting cycle
- Automated nutrunner system ensures knives adequately clamped prior to operating
- Dimensions related to and affecting cutting properties not affected by wearing surfaces due to design of facegear components
- Ring design to allow complete replacement in 10 hour period
- Designed to accommodate plate or disposable knives

SmartRING Stranders

Type		28/81 SmartRING Stranders	32/88 SmartRING Stranders
Number of knives		44	48
Ring assembly weight, approx.	t	7.3	8.5
Ring	rpm	370	334
Ring and arbor work	t/m²	13.2	17.5
Motor size	kW	900 / 1,100 (pine / hardwoods)	1,100 / 1,350 (pine / hardwoods)
Drive type		Power bands V-belts	Power bands V-belts
Total weight, approx.	t	54	60
Dimensions (L x W x H)	mm	9,235 x 4,830 x 5,505	9,500 x 4,935 x 5,540
Traverse way (S)	mm	1,665	1,805

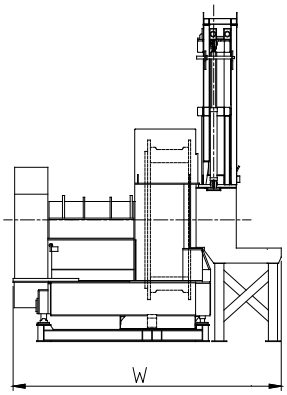

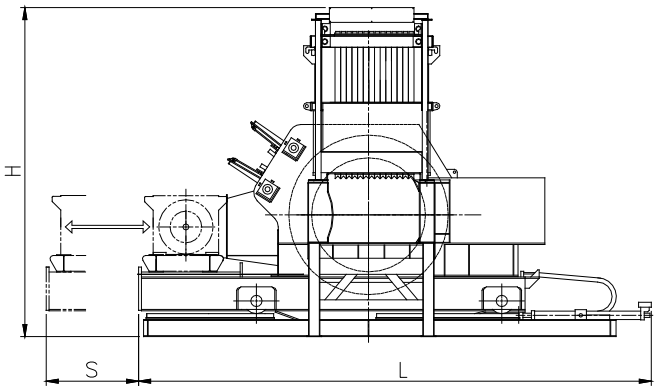

DIEFFENBACHER GMBH
Maschinen- und Anlagenbau
Heilbronner Straße 20
75031 Eppingen, Germany
Phone +49 7262 65-0
wood@dieffenbacher.com
www.dieffenbacher.com

Kadant Carmanah Design
Unit #8 15050 54A Avenue
Surrey BC Canada V3S 5X7
Phone +1 604 299 3431
info.carmanah@kadant.com
www.kadantcarmanah.com

KADANT
AN ACCENT ON INNOVATION

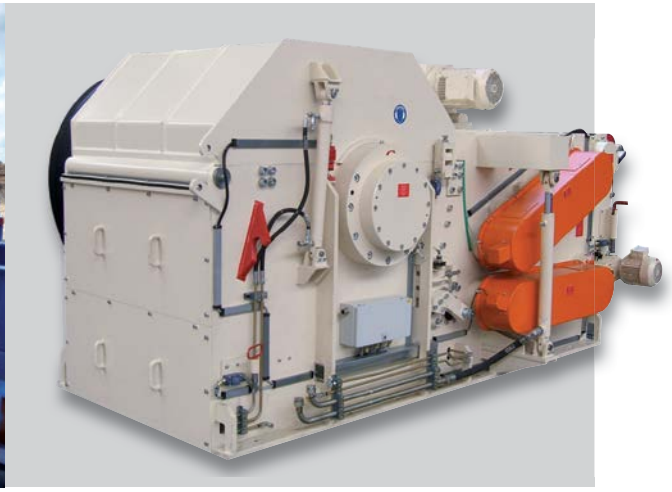

HRL Drum Chipper

Application

- Panel board industry (PB, MDF, OSB)
- Biomass and renewable fuels
- WPC/WFC industry
- Pulp and paper industry

Description

The HRL Drum Chipper is a tried-and-trusted solution for the production of high-quality chips from different wood assortments. The material is gripped horizontally by specially toothed infeed rollers and continuously fed to the chipping rotor. The knives of the rotor cut the material to the required chip length. The chipped material passes an individually adapted refractioning grid.

Customer benefits

- Free choice of wood assortment: round wood, log ends, slabs and offcuts, veneer residues or waste wood
- Constant high chip quality; chip length of 4 – 180 mm possible
- Special machine solutions for production of maxi-chips, micro-chips and biomass such as HRL-OSB (see page 38), HRL-M, HRL-B
- Robust, long-term reliable, low operation costs due to simplified maintenance
- Energy-efficient size reduction

Technical features

- Aggressive shaped infeed rollers with narrow running gaps
- Chipping rotor with slewable knife clamping plates for quick and easy knives exchange
- Regrindable wear plates under the chipping knives
- Counter knife screw-fastened, regrindable, once turnable
- Wear-resistant refractioning grid individually perforated
- Essential parts of the machine are wear-protected and exchangeable

HRL Drum Chipper

Type[1)] Rotor/Infeed opening mm Ø / H1 x W1	Main drive kW	Infeed roller drive (upper/lower) kW	Capacity[2)] rm/h	Capacity[2)] t/h b.d.	Chip Vol.[3)] m³/h	Dimensions[4)] m (L x W x H)	Weight[4)] approx. t
HRL 450 / 150 x 500	30 – 45	2.2 / 2.2	20 – 24	6 – 7	40 – 47	1.6 x 2.2 x 1.2	1.9
HRL 600 / 200 x 650	55 – 75	3 / 3	34 – 40	10 – 12	67 – 80	1.6 x 2.4 x 1.3	5.5
HRL 800 / 250 x 650	75 – 110	5.5 / 5.5	44 – 50	13 – 15	87 – 100	2.4 x 1.7 x 1.4	7.5
x 800	90 – 132	5.5 / 5.5	54 – 64	16 – 19	107 – 127	2.4 x 1.8 x 1.4	8.3
HRL 1000 / 350 x 800	110 – 160	7.5 / 7.5	74 – 87	22 – 26	147 – 173	2.8 x 2.1 x 1.7	11
x 1000	132 – 200	7.5 / 7.5	94 – 110	28 – 33	187 – 220	2.8 x 2.3 x 1.7	13
HRL 1200 / 450 x 800	200 – 315	11 / 11	97 – 114	29 – 34	193 – 227	3.5 x 2.5 x 1.9	14
x 1000	250 – 355	11 / 11	117 – 140	35 – 42	233 – 280	3.5 x 2.7 x 1.9	15.5
x 1200	250 – 355	11 / 11	144 – 170	43 – 51	287 – 340	3.5 x 2.9 x 1.9	17
HRL 1400 / 550 x 1000	315 – 500	15 / 15	144 – 170	43 – 51	287 – 340	4.2 x 2.6 x 2.1	22
x 1200	355 – 500	15 / 15	177 – 210	53 – 63	354 – 420	4.2 x 2.8 x 2.1	24
x 1500	400 – 630	15 / 15	220 – 260	66 – 78	440 – 520	4.2 x 3.1 x 2.1	26
HRL 1600 / 600 x 1000	400 – 500	18.5 / 18.5	157 – 187	47 – 56	313 – 373	4.4 x 2.7 x 2.1	30
x 1200	500 – 630	18.5 / 18.5	193 – 227	58 – 68	386 – 453	4.4 x 2.9 x 2.4	33
x 1500	500 – 800	18.5 / 18.5	240 – 284	72 – 85	480 – 567	4.4 x 3.2 x 2.4	37
HRL 1800 / 750 x 1000	630 – 800	18.5 / 18.5	200 – 234	60 – 70	400 – 467	5.1 x 2.9 x 2.5	34
x 1200	630 – 800	18.5 / 18.5	240 – 287	72 – 86	480 – 573	5.1 x 3.0 x 2.5	37
x 1500	630 – 1,000	18.5 / 18.5	300 – 354	90 – 106	600 – 707	5.1 x 3.3 x 2.5	40
HRL 2000 / 850 x 1200	800 – 1,250	22 / 22	274 – 324	82 – 97	547 – 647	5.7 x 3.4 x 2.7	60
x 1500	800 – 1,400	22 / 22	340 – 400	102 – 120	680 – 800	5.7 x 3.7 x 2.7	66
x 1700	800 – 1,400	22 / 22	384 – 454	115 – 136	767 – 907	5.7 x 3.9 x 2.7	72
HRL 2400 / 1000 x 1500	1,000 – 1,600	22 / 22	400 – 474	120 – 142	800 – 947	6.8 x 3.9 x 3.0	83
x 1700	1,000 – 1,600	22 / 22	450 – 534	135 – 160	900 – 1,067	6.8 x 4.0 x 3.0	91

1) Individual machine sizes and motor power upon request 2) Referring to round wood with a wet density of 450 kg/m³ b.d., a 11 – 13 % filling ratio of the infeed, and a chip length of 40 mm 3) Chip volume flow based on a bulk weight of 150 kg/m³ 4) Dimensions and weight of basic machine without main motor

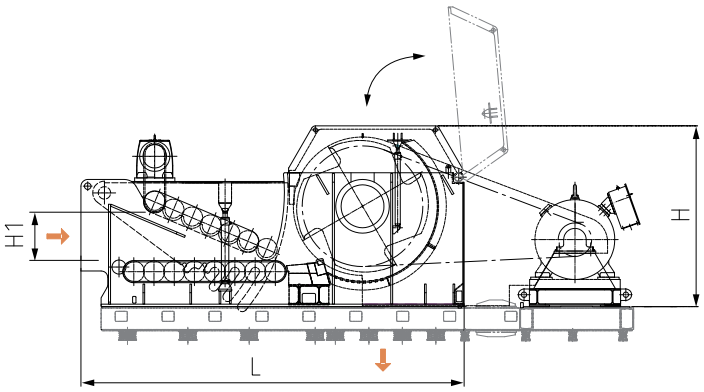

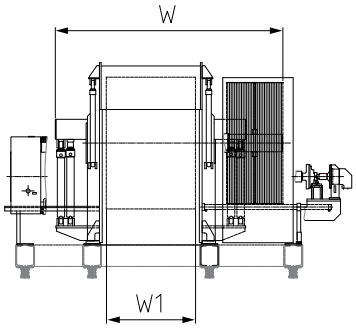

B. MAIER Zerkleinerungstechnik GmbH
Dieffenbacher Group
Schweriner Straße 1
33605 Bielefeld, Germany
Phone +49 521 584943-20
mzb@dieffenbacher.de
www.maier-dieffenbacher.de

Sales Department
Phone +49 521 584943-40
Service and Spare Parts
Phone +49 521 584943-80

SMV Cutting Rotor / Rechipper

Application

- Combustion (energy from waste)
- Recycling industry
- Panel board industry (PB, MDF, OSB)

Description

The SMV Cutting Rotor is an effective robust solution for the reduction of short-sized industrial waste wood, bark and fibrous raw materials into quality chips.
The material is fed through the large vertical hopper, chipped by the knives of the rotor and further classified by an individually adapted refractioning grid.

Customer benefits

- Wide range of input material such as screened chip oversizes, short-sized industrial waste wood, bark, annual plants, cardboard waste and fibrous raw materials
- Output material size adjustable
- Energy-efficient size reduction
- Essential parts of the machine are wear-protected and exchangeable
- Low-maintenance and service-friendly

Technical features

- Large vertical infeed hopper
- Chipping rotor in heavy-duty execution with wear protection
- Counter knife of high-quality special steel, regrindable and adjustable
- Wear plate under the chipping knife, regrindable and adjustable
- Easy access to the rotor in case of maintenance

SMV Cutting Rotor / Rechipper

Type Rotor/Infeed opening mm Ø / L1 x W1	Main drive kW	Capacity[1)] t/h b.d.	Dimensions[2)] m (L x W x H)	Weight[2)] approx. t
SMV 450 / 200 x 650	22 – 55	1 – 4	0.8 x 1.0 x 1.1	1.9
SMV 600 / 300 x 650	45 – 90	2 – 6	1.1 x 1.0 x 1.4	2.6
SMV 800 / 350 x 800	55 – 132	4 – 8	1.5 x 1.2 x 1.9	4.2
SMV 1000 / 400 x 1000	90 – 200	6 – 13	1.8 x 1.4 x 2.2	6.3

1) Depending on input and size of output material
2) Dimensions and weight of basic machine without main motor and infeed hopper

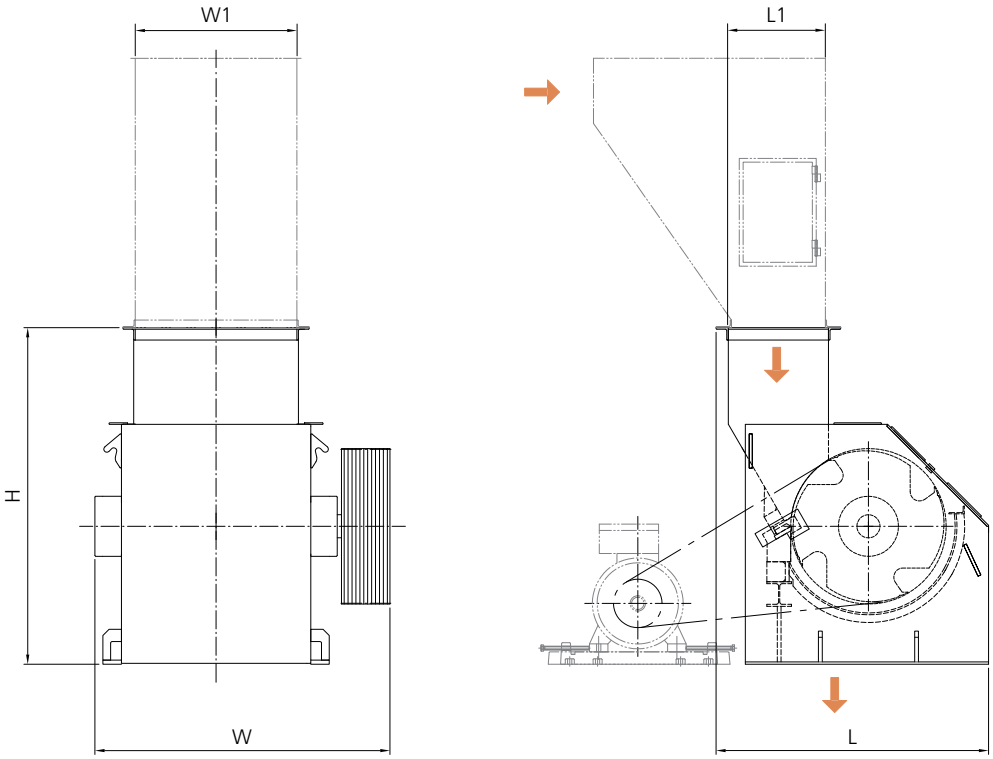

B. MAIER Zerkleinerungstechnik GmbH
Dieffenbacher Group
Schweriner Straße 1
33605 Bielefeld, Germany
Phone +49 521 584943-20
mzb@dieffenbacher.de
www.maier-dieffenbacher.de

Sales Department
Phone +49 521 584943-40
Service and Spare Parts
Phone +49 521 584943-80

MGB Big Crusher

Application

- Panel board industry (PB, MDF, OSB)
- Recycling industry
- Biomass and renewable fuels
- Combustion (energy from waste)

Description

The MGB Big Crusher is the ideal solution for the reduction of large volume and bulky wooden material or other brittle residues.
Material is directly fed through the large infeed hopper, crushed between a slow rotating, large-dimensioned, teethed roller and aggressive crushing bars at the bottom of the crushing chamber.

Customer benefits

- Wide range of input material from waste wood, railway ties, pallets and furniture to root stumps or electronic waste
- Output material: 100 – 500 mm, adjustable
- Insensitive against impurities and contaminations
- Robust, long-term reliable, low energy consumption and operation costs
- Easy overfloor installation

Technical features

- Large-volumed infeed hopper; available with hydraulically swiveling side wall
- Single-shaft-principle; power transmission to the crusher roller by electro-mechanical power train with hydro clutch
- Wear-protected crushing teeth at the crusher roller, individually shaped, can be re-armored when worn
- Easily exchangeable crushing bars with aggressive edges
- Discharge grate, segmented, in manually movable or hydraulically supported execution

MGB Big Crusher

Type[1] Power/Length kW/mm L1	Rotor[2] mm Ø	Rotor speed rpm	Main drive kW	Capacity[3] t/h b.d.	Hopper volume m³	Hopper cross section m (L1 x W1)	Machine dimensions m (L x W x H)	Weight approx. t
MGB 90 / 3000	815	16 / 20	90	10 – 15	15	3.0 x 2.8	4.8 x 3.3 x 3.3	21
MGB 132 / 3000	815	24	132	15 – 20	15	3.0 x 2.8	4.8 x 3.3 x 3.3	25
MGB 132 / 4000	1,025	24	132	20 – 25	20	4.0 x 2.8	5.8 x 3.3 x 3.3	32
MGB 160 / 4000	1,025	24	160	25 – 35	20	4.0 x 2.8	5.8 x 3.3 x 3.3	32
MGB 200 / 4000	1,025	21	200	35 – 40	20	4.0 x 2.8	5.8 x 3.3 x 3.3	32
MGB 200 / 5000	1,025	21	200	40 – 50	25	5.0 x 2.8	6.8 x 3.6 x 3.3	36

1) Individual machine sizes and motor power upon request
2) Vary depending on number and type of teeth
3) Depending on input and size of output material

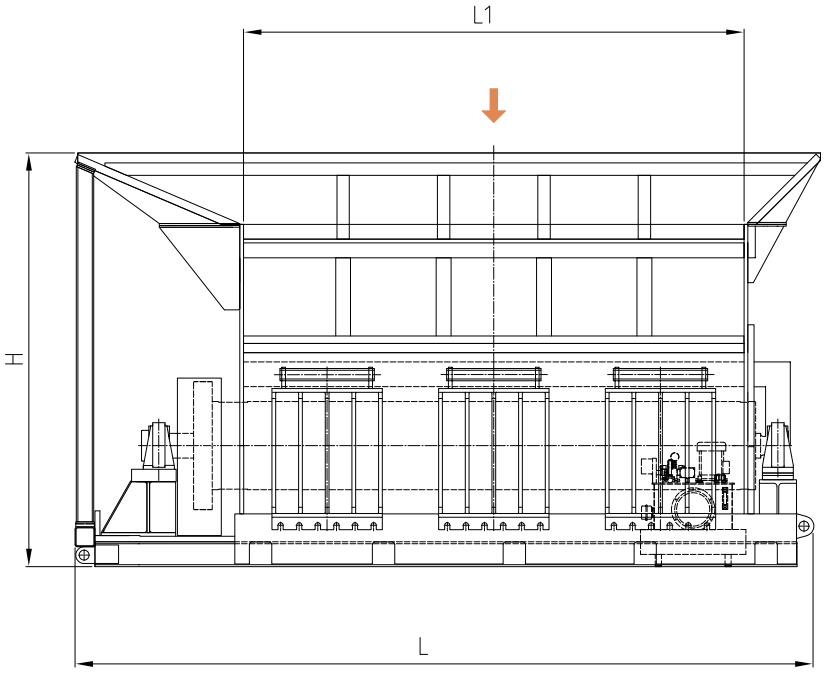

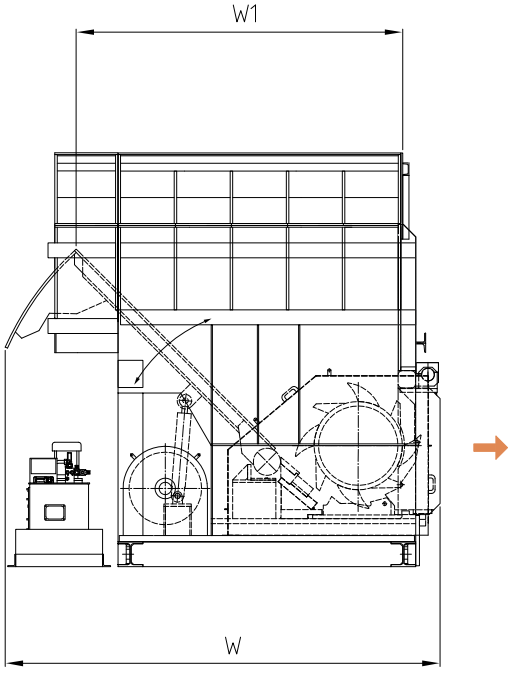

B. MAIER Zerkleinerungstechnik GmbH
Dieffenbacher Group
Schweriner Straße 1
33605 Bielefeld, Germany
Phone +49 521 584943-20
mzb@dieffenbacher.de
www.maier-dieffenbacher.de

Sales Department
Phone +49 521 584943-40
Service and Spare Parts
Phone +49 521 584943-80

Pendulum mounted heavy beaters

SRH Beating Rotor

Application

- Combustion (energy from waste)
- Recycling industry
- Panel board industry (PB, MDF, OSB)

Description

The SRH Beating Rotor is a reliable machine for the production of chips from recycled materials and brittle residues.
The material is gripped horizontally by special toothed infeed rollers and crushed with high kinetic energy between the fast rotating heavy beaters and the counter-knife. The crushed material is further homogenized to the required size at the refractioning grid.

Customer benefits

- Wide range of input material from industrial waste wood, pallets, reclaimed timber to saw mill residues or pre-sorted recyclables
- Output material size individually adjustable
- Energy-efficient size reduction
- Insensitive to impurities
- Essential parts of the machine are wear-protected and easily exchangeable

Technical features

- Aggressively shaped infeed rollers with narrow running gaps
- Pendulum mounted heavy beaters, individually adapted, once turnable (see photo)
- Rotor beaters and beater axes mounted in bushings
- Counter knife screw-fastened, regrindable, once turnable
- Wear-resistant refractioning grid, perforation individually adapted

SRH Beating Rotor

Type Rotor/Infeed opening mm Ø / H1 x W1	Main drive kW	Infeed roller drive (upper/lower) kW	Capacity[1)] t/h b.d.	Dimensions[2)] m (L x W x H)	Weight[2)] approx. t
SRH 600 / 200 x 1000	75 – 110	2.2 / 2.2	3 – 5	1.6 x 1.4 x 1.1	5
SRH 1000 / 350 x 1000	110 – 160	5.5 / 7.5	5 – 10	2.6 x 1.4 x 1.7	10
SRH 1200 / 350 x 1300	250 – 315	5.5 / 7.5	10 – 35	3.5 x 1.7 x 1.8	16
SRH 1600 / 600 x 1500	315 – 450	9.2 / 11	30 – 55	4.8 x 3.1 x 2.6	28

1) Depending on input and size of output material
2) Dimensions and weight of complete machine without main motor

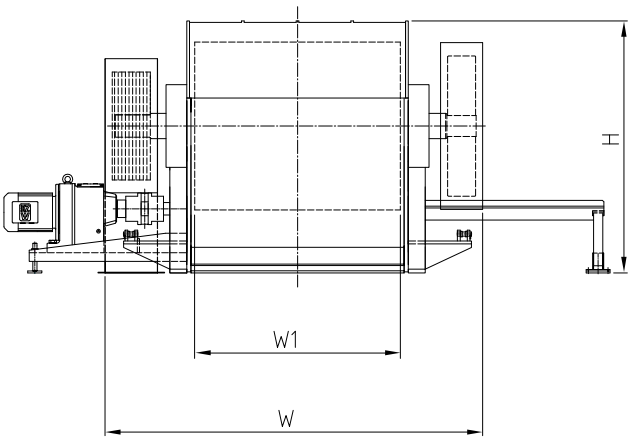

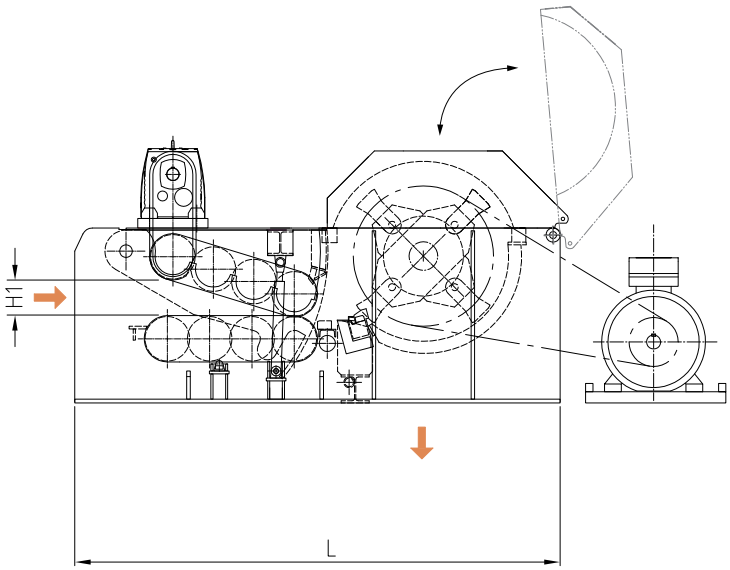

B. MAIER Zerkleinerungstechnik GmbH
Dieffenbacher Group
Schweriner Straße 1
33605 Bielefeld, Germany
Phone +49 521 584943-20
mzb@dieffenbacher.de
www.maier-dieffenbacher.de

Sales Department
Phone +49 521 584943-40
Service and Spare Parts
Phone +49 521 584943-80

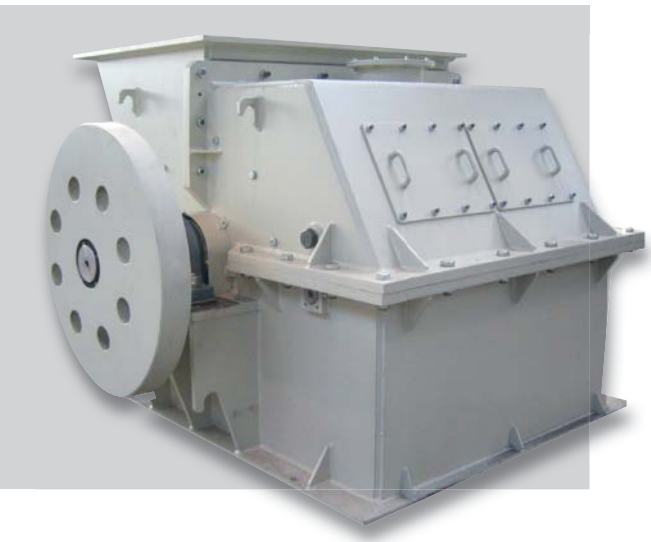

SRV Beating Rotor

Application

- Combustion (energy from waste)
- Recycling industry
- Panel board industry (PB, MDF, OSB)

Description

The SRV Beating Rotor is a cost-effective solution for the production of chips from pre-crushed recycling materials and brittle residues.
The material is fed through the large vertical hopper, crushed with high kinetic energy between the fast rotating heavy rotor beaters and the impact plate. The crushed material is further homogenized to the required size by the refractioning grid.

Customer benefits

- Wide range of input material from industrial waste wood, pallets, reclaimed timber to saw mill residues or pre-sorted recyclables
- Output material size adjustable
- Energy-efficient size reduction
- Insensitive to impurities
- Essential parts of the machine are wear-protected and exchangeable

Technical features

- Large vertical infeed hopper
- Pendulum mounted heavy rotor hammers, individually adapted, once turnable
- Rotor beaters and beater axes mounted in bushings
- Impact plate of wear-resistant special steel, exchangeable
- Wear-resistant refractioning grid, perforation individually adapted

SRV Beating Rotor

Type Rotor/Infeed opening mm Ø / L1 x W1	Main drive kW	Capacity[1)] t/h b.d.	Dimensions[2)] m (L x W x H)	Weight[2)] approx. t
SRV 600 / 300 x 650	75 – 110	1 – 3	1.1 x 1.5 x 1.0	2.3
SRV 800 / 300 x 700	75 – 132	3 – 6	1.7 x 1.3 x 1.2	4.5
SRV 1000 / 700 x 1200	110 – 160	6 – 10	2.6 x 2.6 x 1.6	8.0
SRV 1200 / 850 x 1500	160 – 250	10 – 15	2.7 x 3.1 x 1.8	12.0
SRV 1200 / 850 x 2000	250 – 315	15 – 25	2.7 x 3.6 x 1.8	16.0
SRV 1600 / 850 x 2000	400 – 630	25 – 40	3.2 x 3.6 x 2.4	20.0

1) Depending on input and size of output material
2) Dimensions and weight of basic machine without main motor and infeed hopper

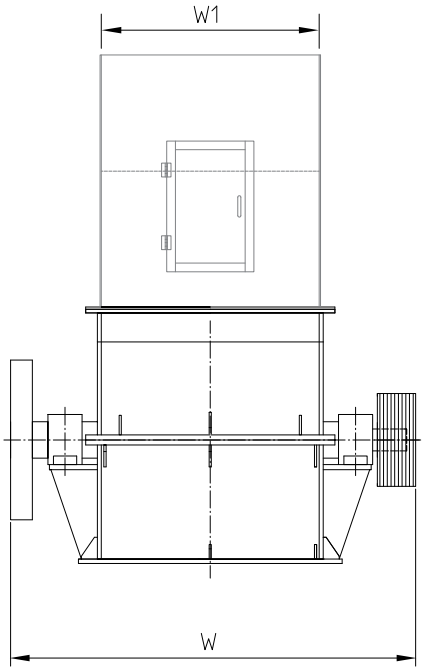

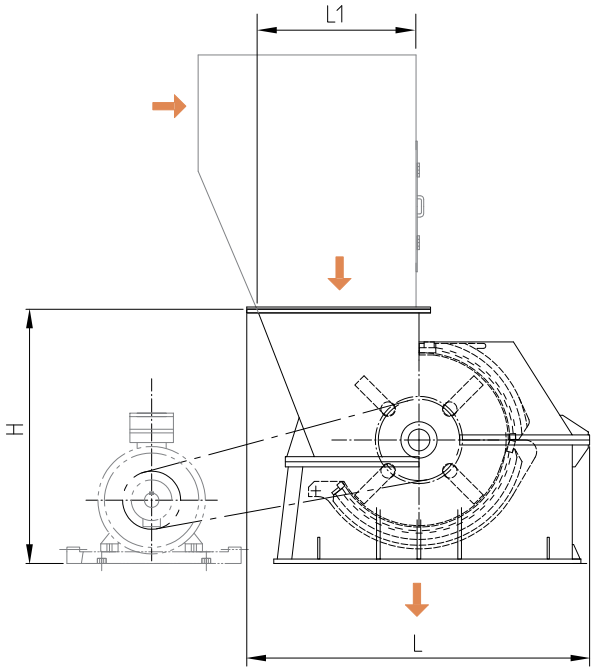

B. MAIER Zerkleinerungstechnik GmbH
Dieffenbacher Group
Schweriner Straße 1
33605 Bielefeld, Germany
Phone +49 521 584943-20
mzb@dieffenbacher.de
www.maier-dieffenbacher.de

Sales Department
Phone +49 521 584943-40
Service and Spare Parts
Phone +49 521 584943-80

ClassiSizer

Application

- Particle board industry
- Pellet and briquette industry
- Biomass and renewable fuels (e.g. substrates for biogas production)
- Dust for combustion (energy and heat generation)
- WPC/WFC industry
- Recycling industry (wood and non-wood)
- Refuse-derived fuel (RDF)

Description

The ClassiSizer reduces input materials to the desired particle size in one step. The material is fed from above into the impact chamber, where it is resized with high kinetic energy by the fast rotating rotor and interaction of the particles itself. The final calibration of material is realized by screens, perforated according to the application. Further the product is collected in two discharge boxes and fed out by screws.

Customer benefits

- Input material from small wooden particles up to offcuts
- Feeding of inhomogeneous material mix possible
- Variable particle size and geometry of final material due to use of screens with different mesh sizes
- Energy-efficient size reduction due to impact technology (high kinetic energy)
- Easy maintenance due to direct access to the impact chamber
- Essential parts of the machine are wear protected and easy exchangeable

Technical features

- Polygonal design of the impact chamber with wear-resistant flat screens for optimal impact effect, easy exchange of individual screen segments
- Rotor with impact elements; different adjusting angle and shape of impact elements depending on application
- Different drive concepts (direct drive, drive via gear box), according to the application
- Fulfilment of ATEX requirements due to different safety concepts (Q-boxes or explosion vans)
- Stand-alone unit; on floor installation

ClassiSizer – Dust Preparation

Type	Capacity[1] approx. t/h b.d.	Rotor beating diameter mm	Number of impact elements pcs.	Installed power[1] kW	Number of screens pcs.	Dimensions[2] m (L x W x H)	Weight[3] approx. t
CS 1200	1 – 1.5	1,100	10	132 – 250	12	3.0 x 5.5 x 4.1	14
CS 1600	2 – 3.5	1,500	10	250 – 355	16	3.7 x 6.2 x 4.9	28
CS 2000	3 – 5.0	1,860	12	355 – 630	14	4.1 x 6.6 x 5.2	36

1) Maximum values achieved when processing dry material (e.g. micro-chips, flakes, pre-crushed board residues) using 1.8 mm screens. Various screen perforations possible. Capacity depends on input and size of output material.
2) Dimensions of basic machine incl. screw conveyor without infeed chute and steelwork
3) Weight without motor and steelwork

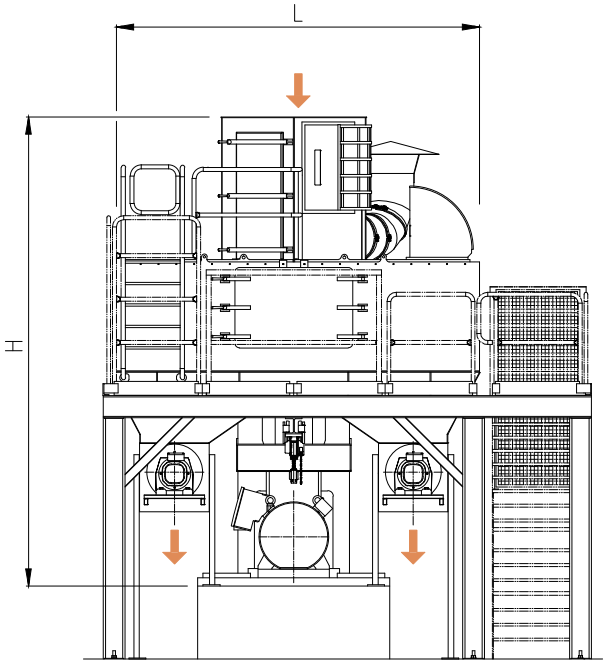

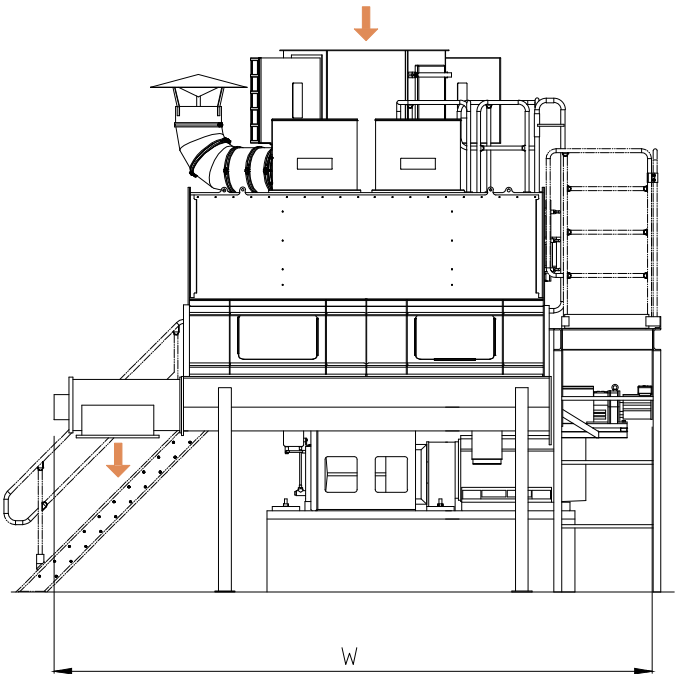

B. MAIER Zerkleinerungstechnik GmbH
Dieffenbacher Group
Schweriner Straße 1
33605 Bielefeld, Germany
Phone +49 521 584943-20
mzb@dieffenbacher.de
www.maier-dieffenbacher.de

Sales Department
Phone +49 521 584943-40
Service and Spare Parts
Phone +49 521 584943-80

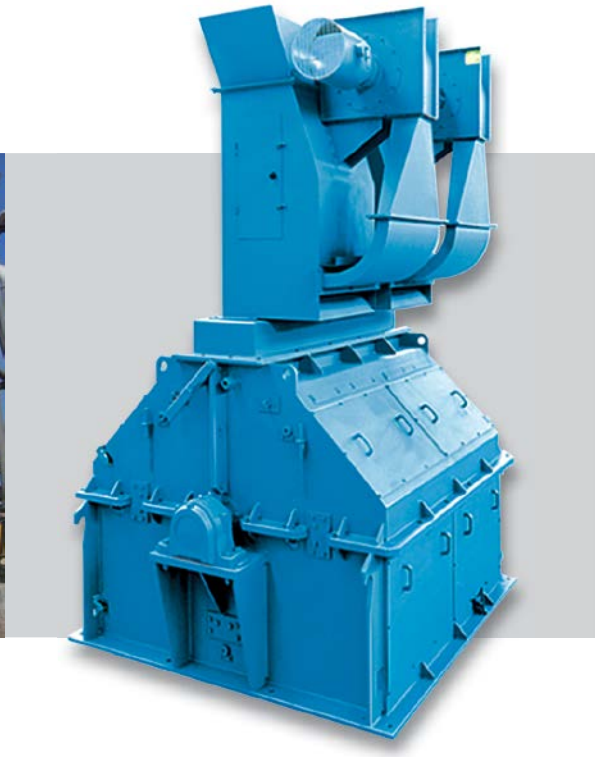

MSZ Beating Flaker

Application

- Particle board industry
- Recycling industry
- Pellet and briquette industry
- Cement-bonded particle board industry
- Pulp and paper
- Animal bedding
- Combustion (energy from waste)

Description

The MSZ Beating Flaker is a tried-and-trusted heavy duty machine for effective processing of dry and wet wooden chips, shavings, pellets and renewable materials into slim quality flakes.
After passing the VC Vibration Conveyor (see page 48), the permanent magnet drum and the HPS Heavy Particle Separator, the material is milled and classified between the beaters of the fast rotating rotor and the alternately arranged grinding tracks and screens.

Customer benefits

- Individually adjustable fineness of final product, narrow particle size distribution
- Robust machine design, insensitive to impurities
- Easy and quick exchange of grinding tracks, screens and beaters
- Low wear and maintenance costs due to reverse operation, service-friendly
- High machine availability

Technical features

- Individually adapted screens and grinding tracks
- Pendulum mounted highly wear-resistant beaters that swivel in case of overload (machine protection)
- Easy exchange of rotor beaters and beater axes due to quick-change system
- Grinding tracks in divided execution; middle and lower grinding tracks laterally movable
- Optional hydraulic system for easier maintenance of screens and grinding tracks

MSZ Beating Flaker

Type Rotor/Working width mm Ø / W1	**Main drive** kW	**Capacity**[1)] t/h b.d.	**Dimensions basic machine**[2)] m (L x W x H)	**Dimensions complete system** m (A x B x C)	**Weight**[2)] approx. t
MSZ 800 / 600	75 – 110	1 – 2.5	2.0 x 1.8 x 1.8	2.9 x 2.2 x 4.1	3.5
MSZ 1000 / 1200	110 – 200	3 – 6	2.5 x 2.0 x 1.8	3.0 x 2.9 x 4.3	5.0
MSZ 1200 / 1600	200 – 315	5 – 9	2.7 x 2.5 x 2.0	3.1 x 4.2 x 4.6	8.0
MSZ 1200 / 2000	250 – 400	7 – 12	3.1 x 2.5 x 2.0	3.1 x 4.6 x 4.6	10.0
MSZ 1600 / 2000	355 – 500	10 – 18	3.1 x 2.8 x 2.4	3.1 x 4.8 x 4.9	15.0

1) Depending on input and size of output material
2) Dimensions and weight of basic machine without add-on units

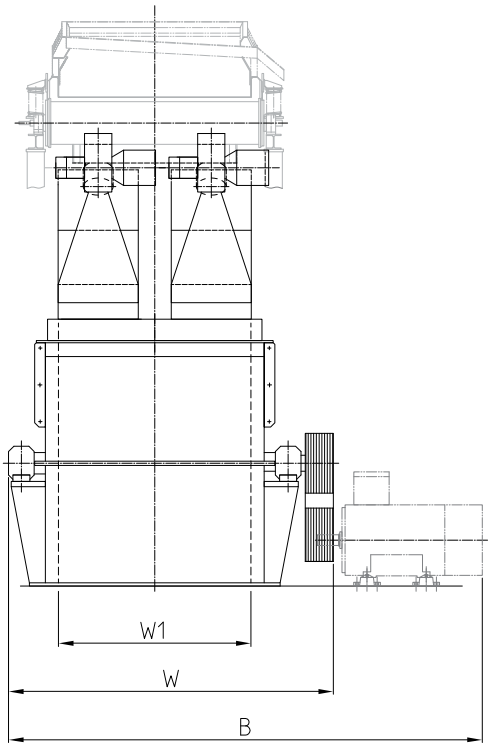

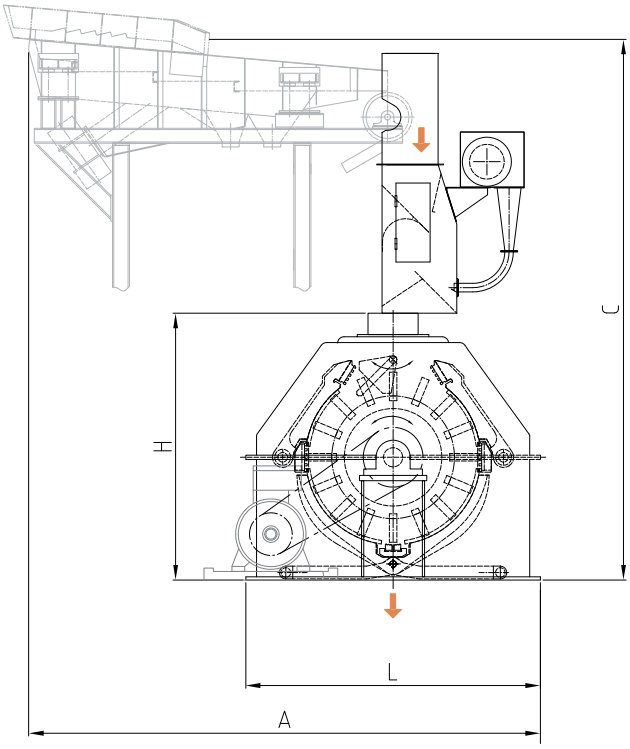

B. MAIER Zerkleinerungstechnik GmbH
Dieffenbacher Group
Schweriner Straße 1
33605 Bielefeld, Germany
Phone +49 521 584943-20
mzb@dieffenbacher.de
www.maier-dieffenbacher.de

Sales Department
Phone +49 521 584943-40
Service and Spare Parts
Phone +49 521 584943-80

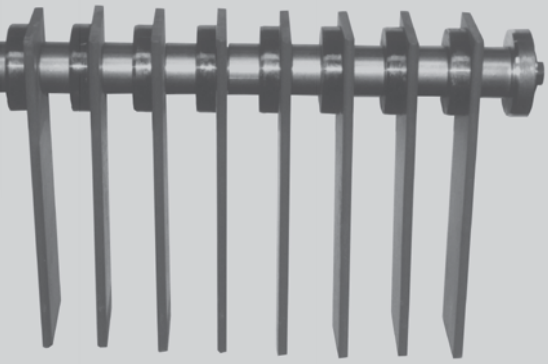

MSZ HS Beating Flaker

Application

- Pellet and briquette industry
- WPC/WFC industry
- Particle board industry
- Combustion (energy from waste)

Description

The MSZ HS (High Speed) Beating Flaker enables the effective processing of wooden chips, pellets, small-sized materials and renewable resources into finest flakes on dry side and cubic flakes on wet side. After passing the VC Vibration Conveyor (see page 48), the permanent magnet drum and the HPS Heavy Particle Separator, the material is milled and classified between the fast rotating beaters and the alternately arranged grinding tracks and screens.

Customer benefits

- Individually adjustable fineness of final product
- High utilization of wear parts due to reverse operation
- Simple and service-friendly design
- Essential machine parts in wear-protected execution, easily exchangeable
- High machine availability

Technical features

- High capacities
- High-speed rotor for 120 m/s, in robust execution
- Pendulum mounted highly wear-resistant beaters that swivel in case of overload (machine protection)
- Various combinations of both the number and type of screens and grinding tracks possible
- Very small screen perforation applicable, large screen surface possible

Machine sizes and data on request

B. MAIER Zerkleinerungstechnik GmbH
Dieffenbacher Group
Schweriner Straße 1
33605 Bielefeld, Germany
Phone +49 521 584943-20
mzb@dieffenbacher.de
www.maier-dieffenbacher.de

Sales Department
Phone +49 521 584943-40
Service and Spare Parts
Phone +49 521 584943-80



MCB Cut Beater

Application

- WPC/WFC production
- Pellet and briquette industry
- Animal bedding
- Combustion (energy from waste)

Description

The MCB Cut Beater enables processing of dry and wet wooden chips, bark and small sized materials into cubic, fibrous flakes.
After passing the VC Vibration Conveyor (see page 48), the permanent magnet drum and the HPS Heavy Particle Separator, the material is milled between the beaters of the fast rotating rotor and various combinations of counter-knives and grinding tracks. The material is finally homogenized at the individually adapted bottom-screen.

Customer benefits

- High flexibility due to individually adjustable fineness of final product
- Robust and long term reliable
- Low operation costs and high machine availability
- Individually adapted sieves and grinding tracks
- Essential parts of the machine are wear-protected and easily exchangeable

Technical features

- Robust rotor, high rotation speed up to 100 m/s
- Pendulum mounted highly wear-resistant beaters, once turnable, that swivel in case of overload (machine protection)
- Easy exchange of rotor beaters and beater axes due to quick-change system (optional)
- Large vertical infeed hopper
- Hydraulic swiveling device for screen clamping

Machine sizes and data on request

B. MAIER Zerkleinerungstechnik GmbH
Dieffenbacher Group
Schweriner Straße 1
33605 Bielefeld, Germany
Phone +49 521 584943-20
mzb@dieffenbacher.de
www.maier-dieffenbacher.de

Sales Department
Phone +49 521 584943-40
Service and Spare Parts
Phone +49 521 584943-80

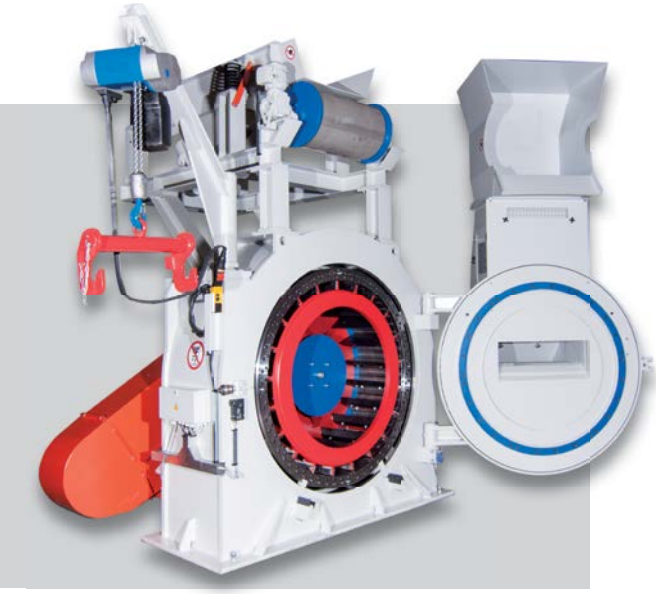

MRZ Knife Ring Flaker

Application

- Particle board industry
- Pellet and briquette industry

Description

The MRZ Knife Ring Flaker is a high-performance machine for the production of high quality flakes.
After passing the VC Vibration Conveyor (see page 48), the permanent magnet drum and the HPS Heavy Particle Separator, the chips are fed into the flaking chamber, guided there to the knives of the static knife ring by the rotating rotor and cut into flat uniform flakes.

Customer benefits

- Constant uniform high-quality flakes, thickness adjustable
- Energy efficient flaking with 12 – 20 kWh/t b.d.
- Special knife ring for soft wood available
- Essential parts of the machine are wear-protected and easily exchangeable
- Boards' high quality

Technical features

- Optimized flake discharge channel due to knife clamping plate
- Integrated chip-cleaning system (optional)
- Rotor with fixed or adjustable rotor knives available
- Curved and straight wear plates available
- Automatic Knife Ring Grinding System (MSA) and Knife Ring Cleaning Machine (MRM) for efficient maintenance available (see page 40 and following)
- VC Vibration Conveyor included

MRZ Knife Ring Flaker

Type Ring mm Ø	Knife ring	Length of knife mm	Number of knives pcs.	Number of rotor blades pcs.	Main drive kW	Capa-city[1] t/h b.d.	Self-propelled air volume m³/h	Dimensions basic machine[2] m (L x W x H)	Dimensions complete system m (A x B x C)	Weight[2] approx. t
MRZ 1200	MR 50	464	50	18	160/200	4.5 – 8.5	6,000 – 8,000	2.2 x 1.5 x 1.9	2.9 x 3.8 x 3.3	6
MRZ 1400	MR 60	464	60	21	250/315	6 – 12	9,000 – 12,000	2.4 x 1.5 x 2.1	3.1 x 4.1 x 3.5	8
MRZ 1500	MR 64	548	64	23	315/355	7 – 15	11,000 – 14,000	2.5 x 1.7 x 2.4	3.3 x 4.5 x 3.7	9
MRZ 1600	MR 72	648	72	25	355/400	8 – 20	12,000 – 15,000	2.9 x 1.8 x 2.5	3.4 x 4.6 x 3.9	10

1) Referring to flake thickness of approx. 0.5 – 0.8 mm, depending on input material
2) Dimensions and weight of basic machine with V-belt pulley on machine side without add-on units

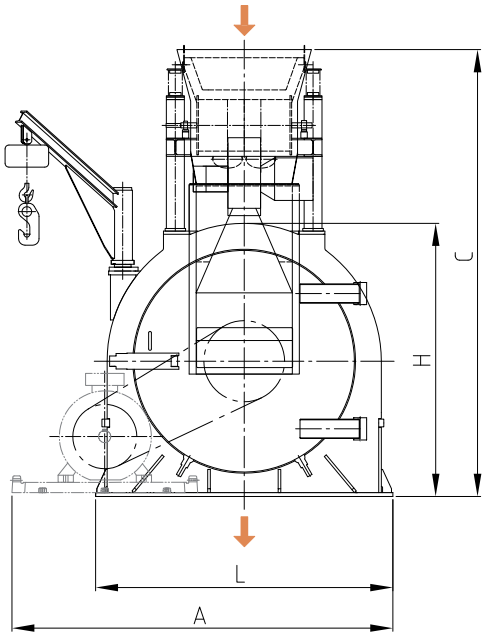

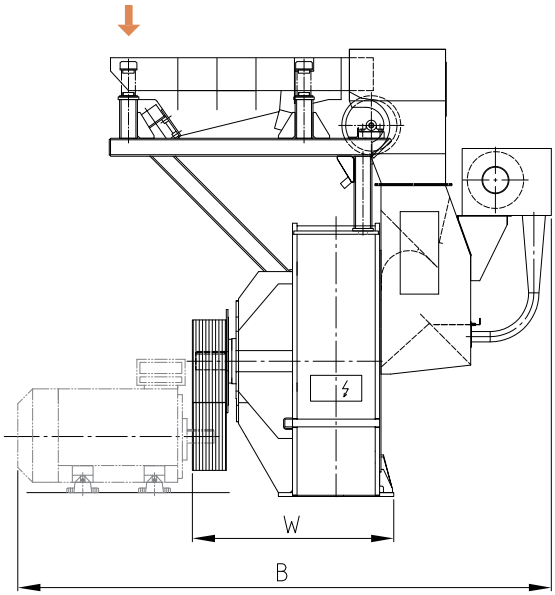

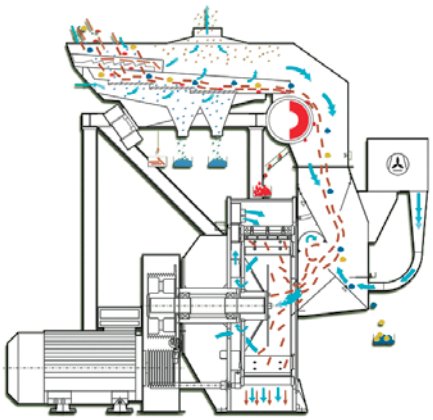

Chip cleaning system (optional)

- Ferrous metals
- Oversizes
- Flakes
- Sand
- Stones
- Air
- Non-ferrous metals

B. MAIER Zerkleinerungstechnik GmbH
Dieffenbacher Group
Schweriner Straße 1
33605 Bielefeld, Germany
Phone +49 521 584943-20
mzb@dieffenbacher.de
www.maier-dieffenbacher.de

Sales Department
Phone +49 521 584943-40
Service and Spare Parts
Phone +49 521 584943-80

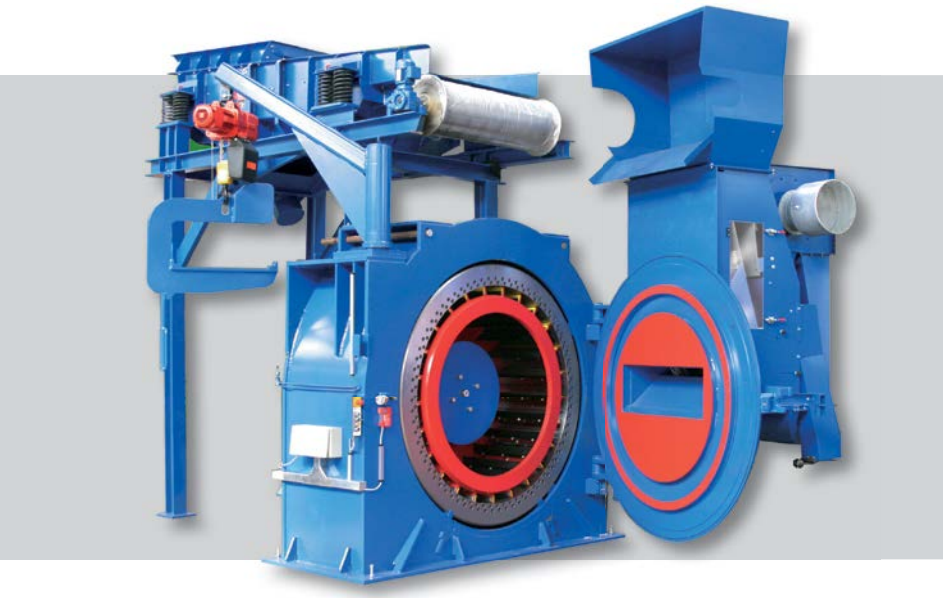

MRZ HS Knife Ring Flaker

Application

- Particle board industry
- Pellet and briquette industry

Description

The MRZ HS (High Speed) Knife Ring Flaker enables the energy-efficient continuous production of fine cut flakes from micro-chips and light-weight materials on dry or wet side.
After passing the VC Vibration Conveyor (see page 48), the permanent magnet drum and the HPS Heavy Particle Separator, the chips are fed into the flaking chamber, guided there by the fast rotating rotor to the knives of the static knife ring and cut into uniform fine flakes.

Customer benefits

- Production of fine cut flakes for the surface layer on wet side as well as on dry side, constant uniform high flake quality
- Extra thin flakes (0.3 – 0.5 mm) for e.g. homogeneous boards, thickness adjustable
- Low energy consumption (approx. 20 kWh/t b.d.)
- Uniform and dense board surface layer for direct lacquering and high bending strength
- Essential parts of the machine are wear-protected and easily exchangeable

Technical features

- Static knife ring and precise rotor bearing system for very high rotor rotation and cutting speed up to 100 m/s
- Very small and light chips can be cut into thin flakes due to high centrifugal forces and a narrow gap between rotor and knife ring
- Optimized flake discharge channel due to knife clamping plate
- Rotor with fixed or adjustable rotor knives available
- Automatic Knife Ring Grinding System (MSA) and Knife Ring Cleaning Machine (MRM) for an efficient maintenance available (see page 40 and following)
- VC Vibration Conveyor included

MRZ HS Knife Ring Flaker

Type Ring mm Ø	Knife ring	Length of knife mm	Number of knives pcs.	Number of rotor blades pcs.	Main drive kW	Capa-city[1] t/h b.d.	Self-propelled air volume m³/h	Dimensions basic machine[2] m (L x W x H)	Dimensions complete system m (A x B x C)	Weight[2] approx. t
MRZ 1200 HS	MR 50	464	50	18	160/200	4 – 7	7,000 – 9,000	2.2 x 1.5 x 1.9	2.9 x 3.8 x 3.3	6
MRZ 1400 HS	MR 60	464	60	21	250/315	6 – 10	12,000 – 14,000	2.4 x 1.5 x 2.1	3.1 x 4.1 x 3.5	8
MRZ 1500 HS	MR 64	548	64	23	315/355	7 – 12	13,000 – 15,000	2.5 x 1.7 x 2.4	3.3 x 4.5 x 3.7	9
MRZ 1600 HS	MR 72	648	72	25	355/400	8 – 14	14,000 – 16,000	2.9 x 1.8 x 2.5	3.4 x 4.6 x 3.9	10

1) Referring to flake thickness of approx. 0.3 – 0.5 mm, depending on input material
2) Dimensions and weight of basic machine with V-belt pulley on machine side without add-on units

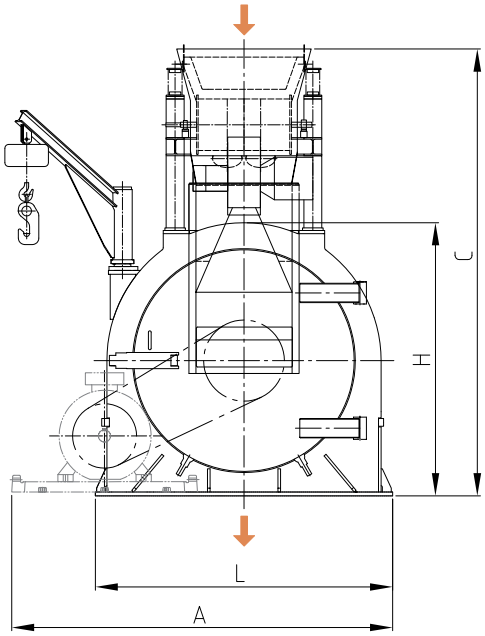

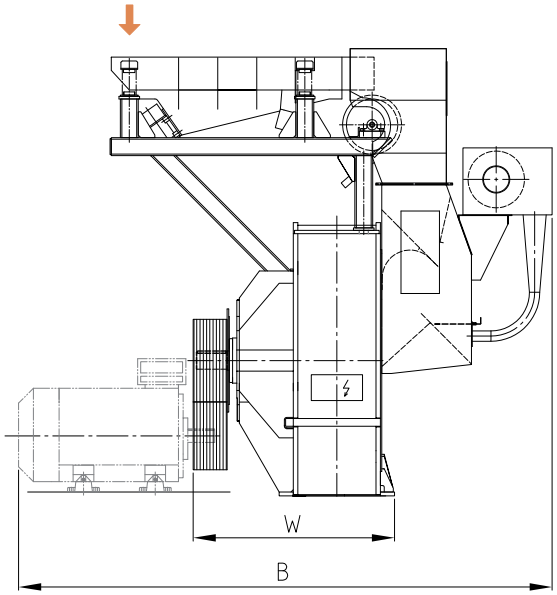

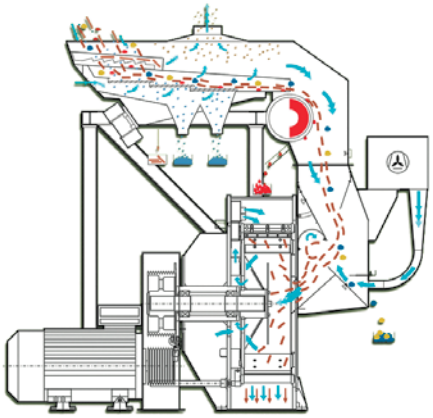

Chip cleaning system (optional)

- Ferrous metals
- Oversizes
- Flakes
- Sand
- Stones
- Air
- Non-ferrous metals

B. MAIER Zerkleinerungstechnik GmbH
Dieffenbacher Group
Schweriner Straße 1
33605 Bielefeld, Germany
Phone +49 521 584943-20
mzb@dieffenbacher.de
www.maier-dieffenbacher.de

Sales Department
Phone +49 521 584943-40
Service and Spare Parts
Phone +49 521 584943-80

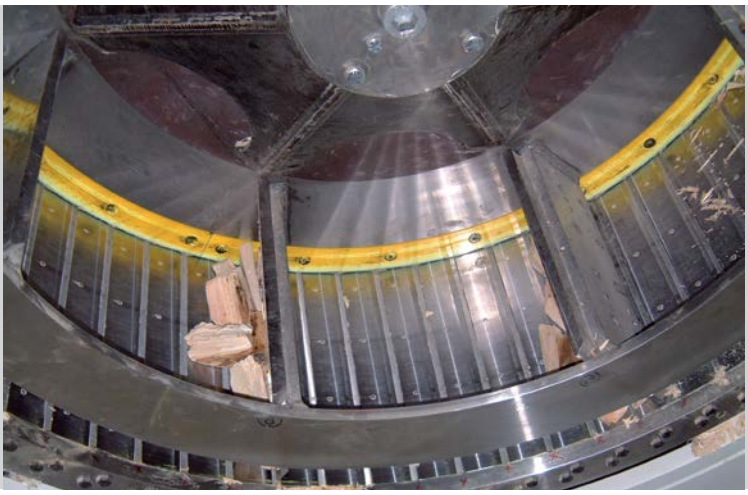

MSF Strand Flaker

Application

OSB-, SSB- and other panel applications

Description

The MSF Strand Flaker enables the energy-efficient continuous production of high-quality strands for OSB from greenwood and pre-cleaned recycling maxi-chips.
After passing the VC Vibration Conveyor (see page 48), the permanent magnet drum and the infeed hopper, the maxi-chips are guided by the heavy-duty rotor to the knives of the static knife ring and cut into uniform flat strands.

Customer benefits

- High-quality OSB by using maxi-chips from low-cost wood assortments (cripple wood, pre-cleaned recycling wood, etc.)
- Energy efficient strand-flaking
- Fast and easy knife ring exchange
- High machine availability
- Cost-efficient solution to enter OSB markets and to increase existing production capacities gradually

Technical features

- Processing of maxi-chips (80 – 140 mm)
- Adjustable strand thickness
- Optimized strand discharge channel and knife-holder geometry
- Rotor and knife ring specially designed for optimal material distribution and strand quality
- Static reinforced knife ring with optimized number of knives
- VC Vibration Conveyor included

MSF Strand Flaker

Type Ring mm Ø	Knife ring	Length of knife mm	Number of knives pcs.	Number of rotor blades pcs.	Main drive kW	Capa-city[1] t/h b.d.	Self-propelled air volume m³/h	Dimensions basic machine[2] m (L x W x H)	Dimensions complete system m (A x B x C)	Weight[2] approx. t
MSF 1400	SKR 60	464	60	7	250/315	6 – 10	7,000 – 10,000	2.5 x 1.6 x 2.3	3.2 x 3.5 x 3.5	8.5
MSF 1500	SKR 64	548	64	9	315/355	8 – 13	9,000 – 12,000	2.6 x 1.8 x 2.5	3.3 x 3.8 x 3.8	9.5
MSF 1600	SKR 72	648	72	11	355/400	10 – 16	10,000 – 13,000	3.0 x 1.9 x 2.7	3.5 x 4.0 x 4.0	10.5

1) Depending on input and size of output material
2) Dimensions and weight of basic machine with V-belt pulley on machine side without add-on units

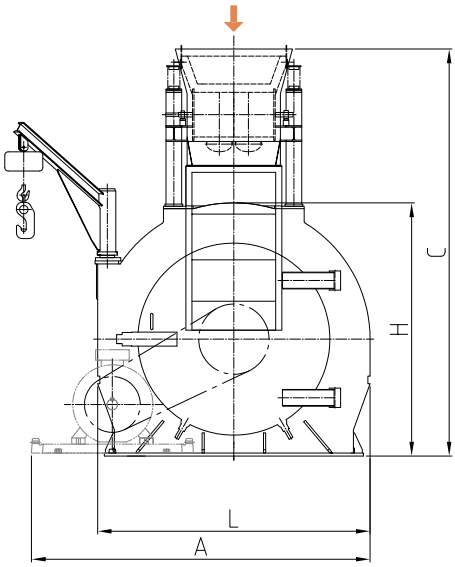

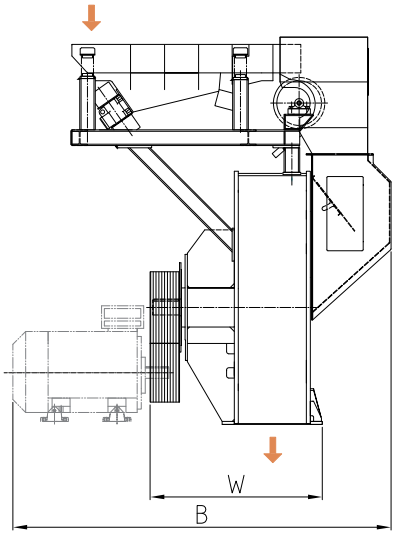

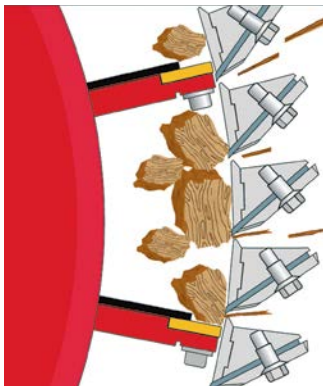

2-stage OSB technology

HRL-OSB Drum Chipper (see page 18) in combination with the MSF Strand Flaker for the production of OSB strands

HRL-OSB Drum Chipper **MSF Strand Flaker**

B. MAIER Zerkleinerungstechnik GmbH
Dieffenbacher Group
Schweriner Straße 1
33605 Bielefeld, Germany
Phone +49 521 584943-20
mzb@dieffenbacher.de
www.maier-dieffenbacher.de

Sales Department
Phone +49 521 584943-40
Service and Spare Parts
Phone +49 521 584943-80

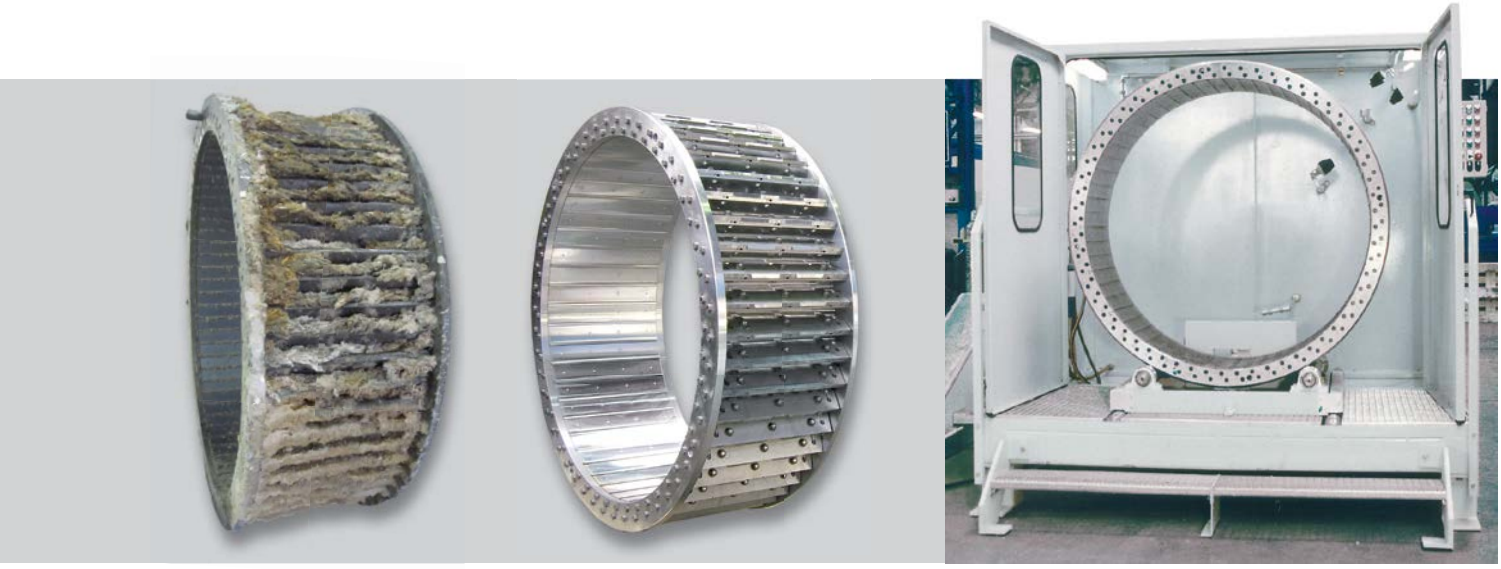

MRM Knife Ring Cleaning Machine

Application

All industries using Knife Ring Flakers and MSF Strand Flakers

Description

The MRM Knife Ring Cleaning Machine is an automated PLC-controlled system for economical and environment-friendly cleaning of all common flaker knife rings. The machine includes the ring removal and rotating device, as well as the high-pressure cleaning and drying system.

Customer benefits

- Highly efficient cleaning
- Easy, safe and clean maintenance of knife rings
- Reduction of maintenance time and operating costs
- Closed machine cabin for clean operation
- Installation without foundation possible

Technical features

- High-pressure nozzles for optimal cleaning
- Uniform cleaning due to the rotating knife ring
- Short ring cleaning time
- Cleaning program adjustable by PLC control
- Integrated drying system

MRM Knife Ring Cleaning Machine

Type	Knife ring mm Ø	Knife ring cleaning time[1] min.	Dimensions[2] m (L x W x H)	Weight[2] approx. t
MRM 14	1,400	15 – 25	2.5 x 2.3 x 3.0	2.3
MRM 15	1,500	20 – 30	2.7 x 2.6 x 3.2	2.7
MRM 16	1,600	25 – 35	3.0 x 3.0 x 3.5	3.1

1) Depending on the chosen cleaning program and the degree of the ring pollution
2) Dimensions and weight of complete machine with base frame

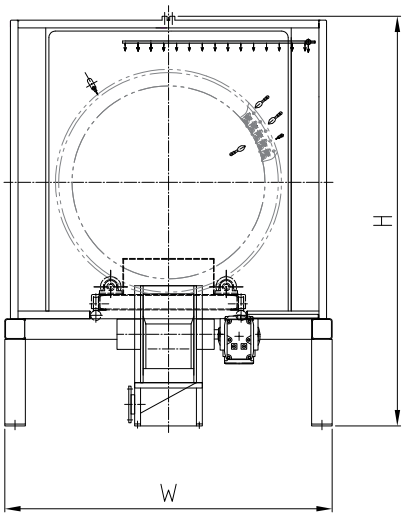

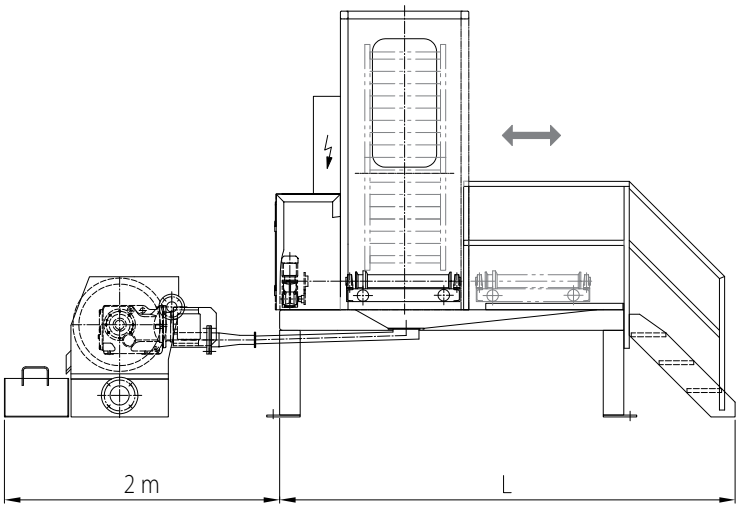

B. MAIER Zerkleinerungstechnik GmbH
Dieffenbacher Group
Schweriner Straße 1
33605 Bielefeld, Germany
Phone +49 521 584943-20
mzb@dieffenbacher.de
www.maier-dieffenbacher.de

Sales Department
Phone +49 521 584943-40
Service and Spare Parts
Phone +49 521 584943-80

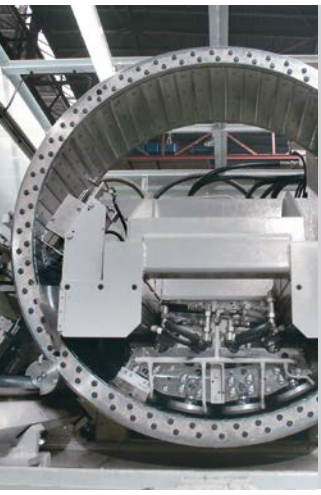

Cleaning system for grinding emulsion

MSA Automatic Knife Ring Grinding System

Application

All industries using Knife Ring Flakers and MSF Strand Flakers

Description

The MSA Automatic Knife Ring Grinding System enables the automated PLC-controlled precise regrinding and adjusting of knives in all common types of knife rings.

Customer benefits

- Precise regrinding with adjustable relief angle
- Short regrinding time due to multi-disc grinding-head
- Reduced operating costs
- Optimized flake quality due to precise and variable adjustment of knife protrusion
- Environment-friendly due to emulsion cleaning system

Technical features

- Automatic identification of every knife ring due to coding
- Each process step, grinding speed and regrinding measure per stroke is individually adjustable
- Long-life grinding discs
- Cleaning system for grinding emulsion (see detail, photo above)
- Siemens PLC-control with comfort touch panel, remote maintenance unit and intuitive menu navigation for easy operation
- Recording of life cycle data of each knife ring

MSA Automatic Knife Ring Grinding System

Type	Knife ring type	Knife ring mm Ø	Number of knives per knife ring pcs.	Regrindable knife angle °	Knife ring grinding time[1)] min.	Dimensions m (L x W x H)	Weight approx. t
MSA 14	MR 60	1,400	60	35 – 42	45 – 50	3.5 x 2.6 x 2.6	8
MSA 15	MR 64	1,500	64	35 – 42	60 – 65	3.8 x 2.8 x 2.7	8.5
MSA 16	MR 72	1,600	72	35 – 42	70 – 75	4.0 x 3.0 x 2.8	9

1) Values, achieved by regrinding measure of 0.5 mm

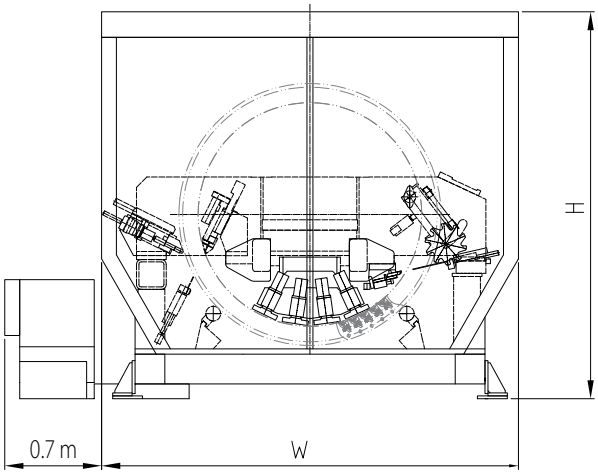

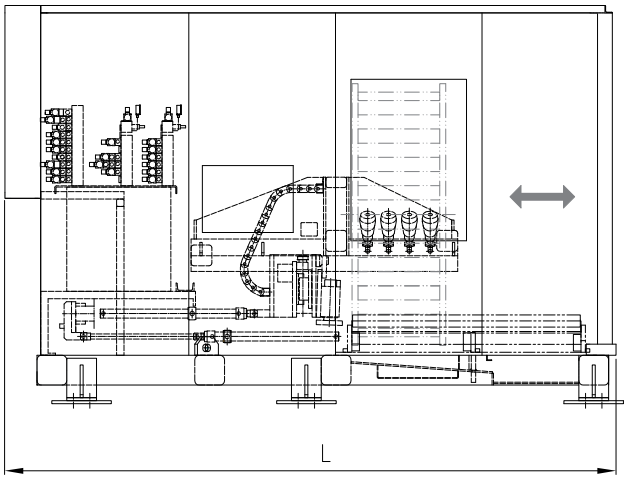

B. MAIER Zerkleinerungstechnik GmbH
Dieffenbacher Group
Schweriner Straße 1
33605 Bielefeld, Germany
Phone +49 521 584943-20
mzb@dieffenbacher.de
www.maier-dieffenbacher.de

Sales Department
Phone +49 521 584943-40
Service and Spare Parts
Phone +49 521 584943-80

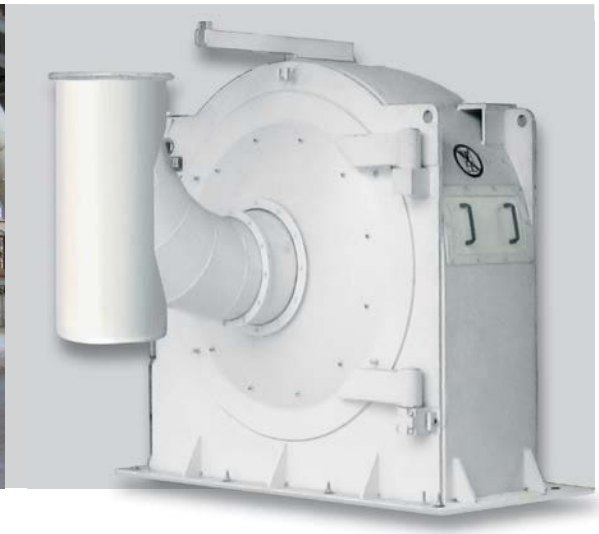

MPF Prallfiner

Application

- Surface layer production in particle board industry
- Preparation of filling and insulation material
- Preparation of fuel for thermal utilization
- WPC/WFC industry
- Animal food and bedding

Description

The MPF Prallfiner enables the continuous processing of soft to medium-hard materials into slim fine flakes or wooden powder.
After passing the VC Vibration Conveyor (see page 48), the permanent magnet drum and the HPS Heavy Particle Separator the material is fed from the back side into the grinding chamber, where it is milled between the rotor beater ledges and the grinding track.
The final product is pneumatically discharged through the door (differentiation to MPM, page 46).

Customer benefits

- Wide range of input materials like pre-sized wood, annual plants, pellets, grain and inorganic materials
- Production of mainly slim finest flakes, wood powder or dust
- Dry or humid input material
- Degree of fineness adjustable by baffle plate, rotor speed and air extraction volume (bypass-valve)
- Low maintenance and service-friendly
- Onfloor installation; pneumatic product discharge through the door

Technical features

- Grinding track segments and their configuration adaptable to the input material
- Wear-resistant, clamped and easily exchangeable grinding track segments
- Complete grinding ring easily removable
- Divided beater ledges for selective exchange of worn parts
- Maintenance opening in casing for easy exchange of the rotor beater ledges
- Insensitive to impurities, no screens
- VC Vibration Conveyor included

MPF Prallfiner

Type	Rotor mm Ø	Number of beater ledges pcs.	Number of grinding tracks pcs.	Width of grinding track mm	Main drive kW	Capacity[1] t/h b.d.	Dimensions basic machine[2] m (L x W x H)	Dimensions complete system m (A x B x C)	Weight[2] approx. t
MPF 9 / 430	900	18	9	430	90 – 132	1.0 – 2.0	1.5 x 1.2 x 1.3	2.7 x 2.2 x 2.6	2.0
MPF 12 / 430	1,200	24	15	430	110 – 160	2.0 – 3.0	1.8 x 1.5 x 1.7	2.7 x 2.6 x 3.6	2.5
MPF 14 / 550	1,400	30	20	550	250 – 315	3.0 – 5.0	2.3 x 1.9 x 2.2	3.0 x 3.0 x 3.8	5.5
MPF 16 / 550	1,600	36	22	550	250 – 400	5.0 – 6.5	2.4 x 2.0 x 2.3	3.3 x 3.2 x 4.0	7.0
MPF 18 / 700	1,800	40	30	700	315 – 500	6.5 – 8.0	2.7 x 2.1 x 2.5	3.3 x 3.5 x 4.0	8.0

1) Maximum values achieved when processing flat flakes of coniferous wood
2) Dimensions and weight of basic machine with V-belt pulley on machine side without add-on units
Note: The MPF is exhausted with approx. 4 m³ air per kg material.

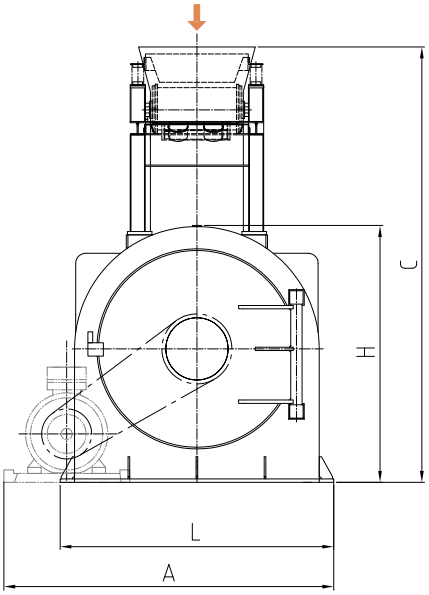

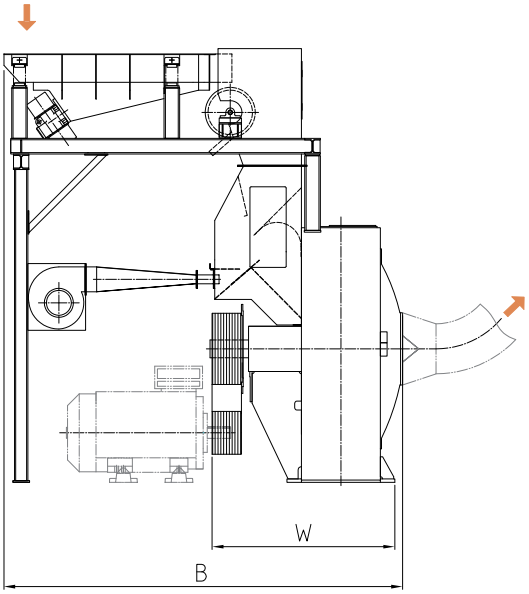

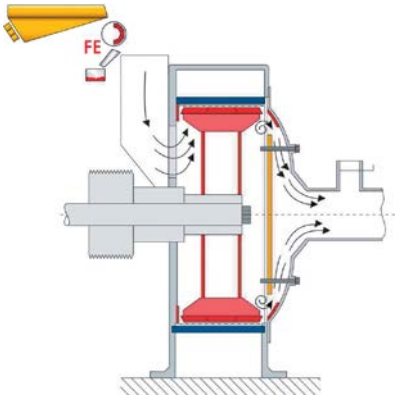

B. MAIER Zerkleinerungstechnik GmbH
Dieffenbacher Group
Schweriner Straße 1
33605 Bielefeld, Germany
Phone +49 521 584943-20
mzb@dieffenbacher.de
www.maier-dieffenbacher.de

Sales Department
Phone +49 521 584943-40
Service and Spare Parts
Phone +49 521 584943-80

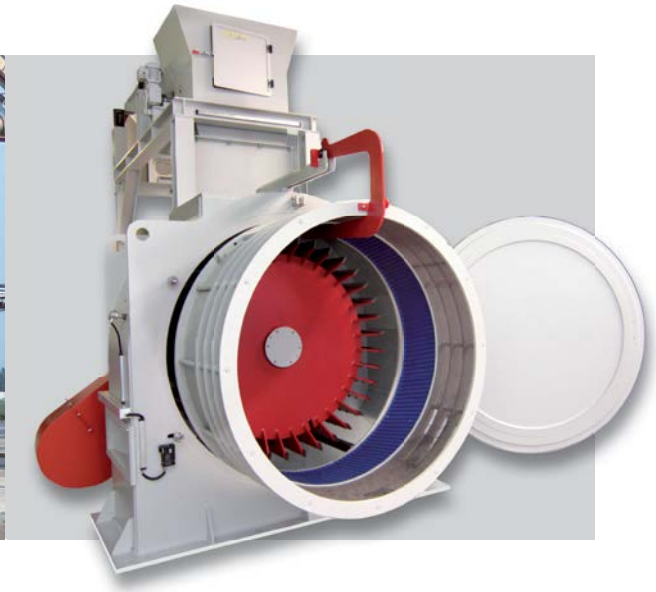

MPM Impact Mill

Application

- Surface layer production in particle board industry
- Preparation of filling and insulation material
- Preparation of fuel for thermal utilization
- WPC/WFC industry
- Animal food and bedding

Description

The MPM Impact Mill enables the continuous processing of soft to medium-hard materials into cubic fine flakes or wooden powder.
After passing the VC Vibration Conveyor (see page 48), the permanent magnet drum and the HPS Heavy Particle Separator the material is fed from the back side into the grinding chamber, where it is milled between the rotor beater ledges and the grinding track.
The material is finally reduced and calibrated by the integrated special fine hole screen (differentiation to MPF, page 44).

Customer benefits

- Wide range of input materials like pre-sized wood, annual plants, grain, seeds and spices
- Adjustable degree of fineness
- Fast screen exchange without removing the complete grinding ring
- Low maintenance and service-friendly
- Onfloor or pit installation; pneumatic product discharge laterally or downwards possible

Technical features

- Grinding track segments and their configuration adaptable to the input material
- Wear-resistant, clamped and easily exchangeable grinding track segments
- Special fine hole screens with different mesh-sizes applicable
- Divided beater ledges for selective exchange of the worn parts
- Maintenance opening in casing for easy exchange of the rotor beater ledges
- VC Vibration Conveyor included

MPM Impact Mill

Type	Rotor mm Ø	Number of beater ledges pcs.	Width of sieve ring mm	Width of grinding track mm	Main drive kW	Capacity[1] t/h b.d.	Dimensions basic machine[2] m (L x W x H)	Dimensions complete system m (A x B x C)	Weight[2] approx. t
MPM 9 / 175	900	18	230	175	90 – 132	2.0 – 2.5	1.5 x 1.1 x 1.3	2.7 x 2.1 x 2.6	1.8
MPM12 /175	1,200	24	230	175	110 – 160	2.5 – 3.0	1.8 x 1.4 x 1.7	2.7 x 2.5 x 3.6	2.3
MPM14 /175	1,400	30	390	175	160 – 200	3.0 – 4.0	2.3 x 1.7 x 2.2	2.7 x 2.9 x 3.8	3.8
MPM14 /350	1,400	30	340	350	315 – 400	4.0 – 5.5	2.3 x 1.8 x 2.2	2.7 x 3.3 x 3.8	5.3
MPM16 /350	1,600	36	360	350	355 – 450	5.5 – 6.5	2.5 x 1.9 x 2.3	3.0 x 3.3 x 3.9	6.5
MPM18 /350	1,800	40	350	350	400 – 500	6.5 – 7.5	2.7 x 2.0 x 2.5	3.2 x 3.3 x 4.0	8.0

1) Maximum values achieved when processing flat flakes of coniferous wood using a 3 mm special fine hole screen insert
2) Dimensions and weight of basic machine with V-belt pulley on machine side without add-on units
Note: The MPM is exhausted with approx. 4 m³ air per kg material.

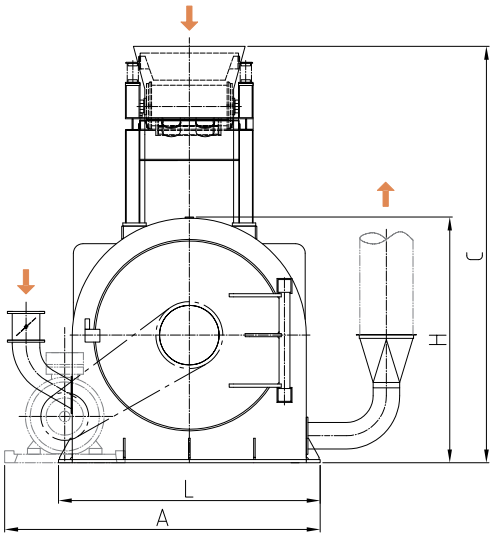

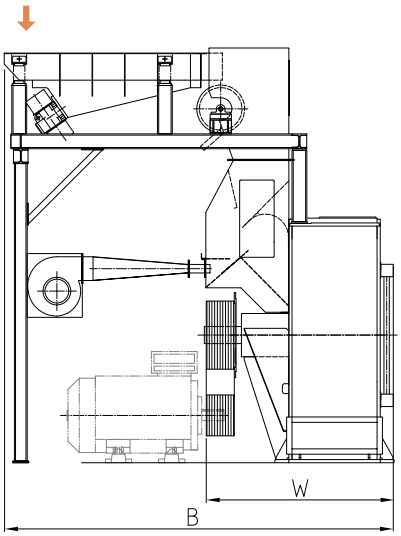

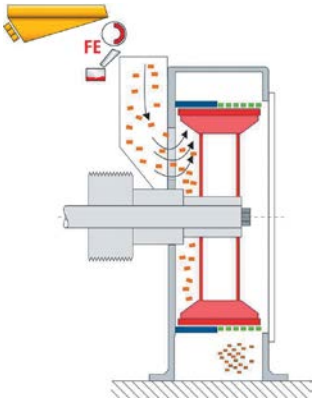

B. MAIER Zerkleinerungstechnik GmbH
Dieffenbacher Group
Schweriner Straße 1
33605 Bielefeld, Germany
Phone +49 521 584943-20
mzb@dieffenbacher.de
www.maier-dieffenbacher.de

Sales Department
Phone +49 521 584943-40
Service and Spare Parts
Phone +49 521 584943-80



VC Vibration Conveyor

Application

Single machine feeding and/or screening in:
- Panel board industry (PB, MDF, OSB)
- WPC/WFC industry
- Recycling industry
- Bio-fuel industry
- Pellet and briquette industry

Description

The VC Vibration Conveyor enables the continuous feeding of various bulky materials. According to the required applications, such as single machine feeding (e.g. MRZ, MSF, MSZ, MPM, MPF et al.), combined feeding with screening, or stand-alone screening device, different executions and sizes are available.

Customer benefits

- Vibrating speed freely adjustable
- Increased machine performance by homogenized feeding
- Integrated screening of fines, oversizes or other fractions possible (optional)
- Low energy consumption
- Low maintenance and service-friendly

Technical features

- Trough supported by steel springs, variable inclination angle
- Combination with magnet drum and HPS Heavy Particle Separator possible
- Driven by unbalanced motors
- Execution with easily exchangeable screens available
- Dust cover for clean operation available

VC Vibration Conveyor

Type[1)] Working width/length mm	Drive kW	Dimensions[2)] m (L x W x H)	Weight t
VC 500 / 1500	2 x 0,6	1.6 x 1.1 x 0.9	0.2
VC 650 / 2000	2 x 0,6	2.1 x 1.3 x 0.9	0.3
VC 900 / 2000	2 x 0,6	2.1 x 1.5 x 0.9	0.4
VC 1200 / 3600	2 x 2,2	3.7 x 1.9 x 1.5	1.3
VC 1800 / 3600	2 x 2,2	3.7 x 2.5 x 1.6	1.5

1) Standard execution; optional with special fine hole screen or with special fine hole and oversize screen available
2) Individual dimensions on customer request

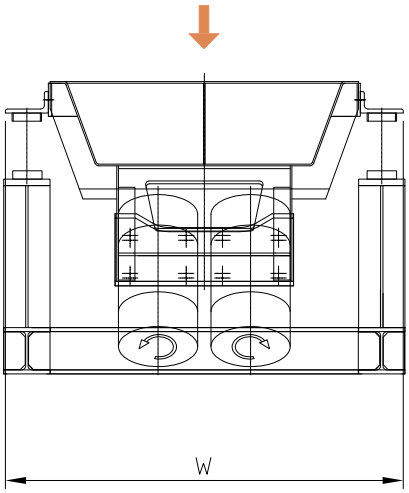

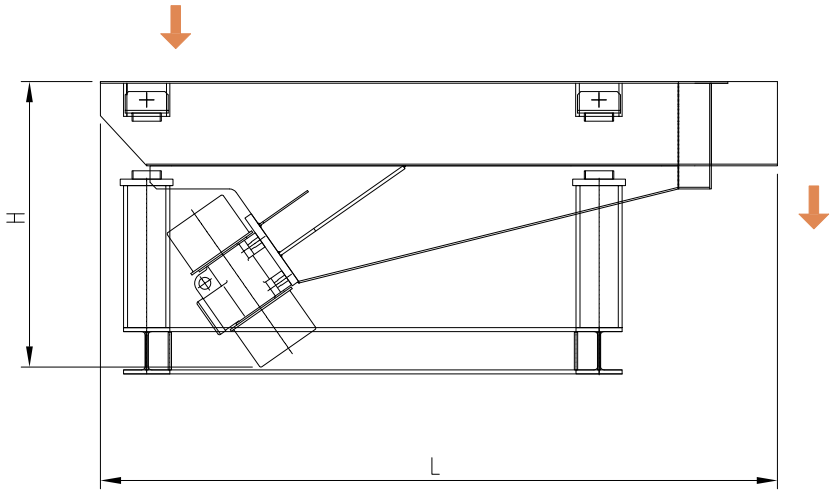

B. MAIER Zerkleinerungstechnik GmbH
Dieffenbacher Group
Schweriner Straße 1
33605 Bielefeld, Germany
Phone +49 521 584943-20
mzb@dieffenbacher.de
www.maier-dieffenbacher.de

Sales Department
Phone +49 521 584943-40
Service and Spare Parts
Phone +49 521 584943-80

Refiner

Application

Provide qualified fibers for the manufacturing of MDF/HDF and insulation boards

Description

Qualified chips will be softened via steam and ground in the refining mechanism.

Customer benefits

- High efficiency
- Stable fiber quality
- Easy maintenance
- Various refiner segment geometries available and combinations possible for different types of wood

Technical features

- Mechanical sealing system for stable performance
- Increased infeed screw size and enlarged volume of vertical digester for high fiber quality
- Specific visualization system for easy operation

Refiner

Item		Parameter
Fiber capacity (bone dry)	t/h b.d.	7.5 – 15
Infeed screw specification	inch	14 – 18
Refiner segment diameter	inch	42 – 48
Main motor power	kW	1,600 – 3,300

Example: 48 inch Refiner

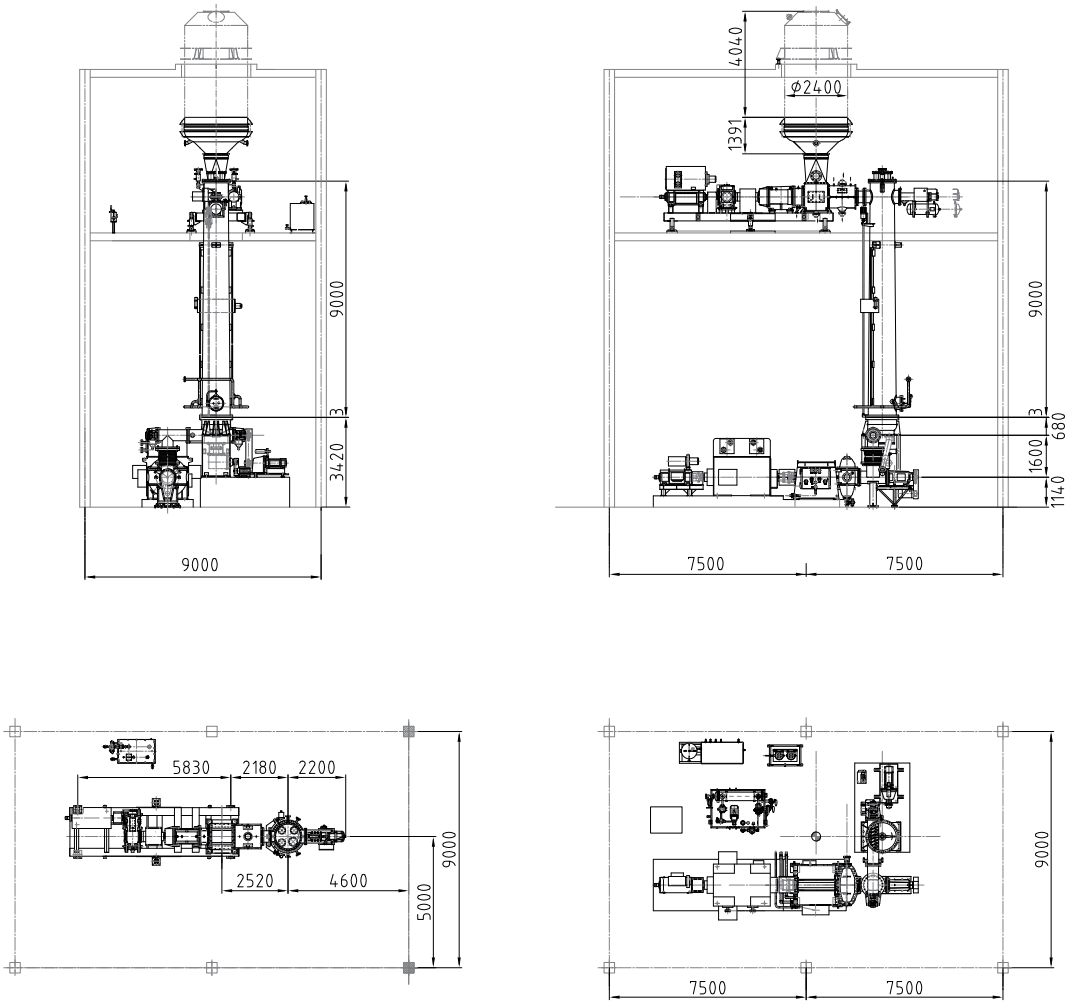

DIEFFENBACHER Group
Shanghai Wood-Based Panel Machinery Co., Ltd.
No. 299, Hejing Road, Anting
Shanghai 201805, P.R. China
Phone +8621 5957 7480
swpm@swpm.cn
www.swpm.cn

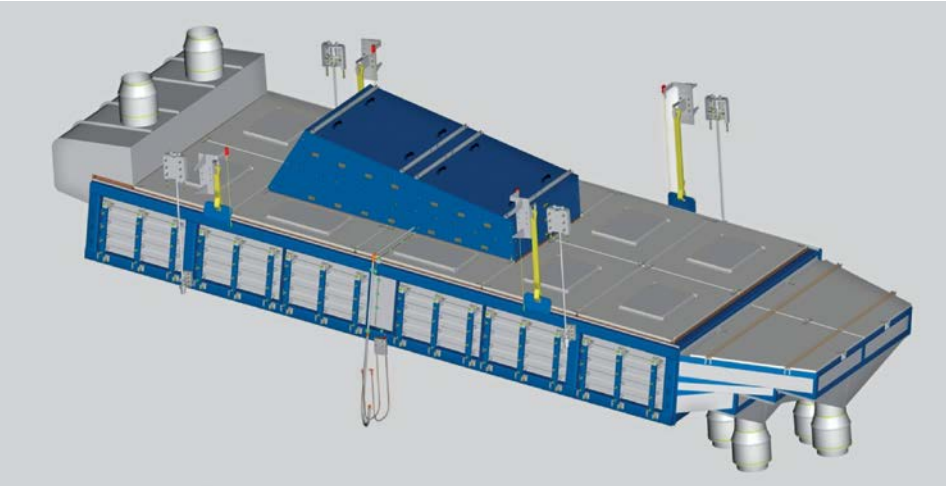

RS Oscillating Screen

Application

Dry flake screening in PB factories and pellet plants

Description

The RS oscillating screen is a hanging screen, developed for the screening of dried flakes. It makes a horizontal oscillating movement and has an 8° inclination. The screen is available in four sizes and configured for the needs of the process requirements.

Customer benefits

- High screening efficiency
- Long frame life-time
- Easy and quick change of screen nets
- Self-cleaning screen nets
- Light support structures

Technical features

- Drive system
- Screen nets for different fractions, with or without cleaning balls
- Hanging frame with safety switches
- Discharge chutes
- Explosion hatches
- Fire extinguishing piping and nozzles
- ATEX classification: Category 1/3, according to Annex 1 of 94/9/EC used in Zone 20

RS Oscillating Screen

Type	Capacity t/h b.d. @150 kg/m³	Main Drive kW	Dimensions mm A	B	C	L1	L2	H1	H2	W	Weight approx. t
RS 10	9	7.5	6,240	2,930	2,160	5,530	6,700	3,240	3,770	5,151	4.70
RS 13	12	7.5	8,720	2,930	2,160	7,750	8,840	3,240	3,770	5,151	6.50
RS 17	15	15	8,720	4,000	2,160	7,750	8,840	3,240	3,770	6,540	9.40
RS 25	22	15	11,085	4,000	2,160	13,200	11,875	4,075	3,850	6,710	12.05

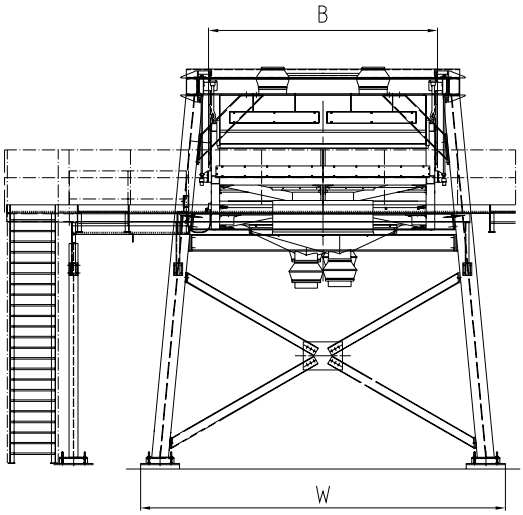

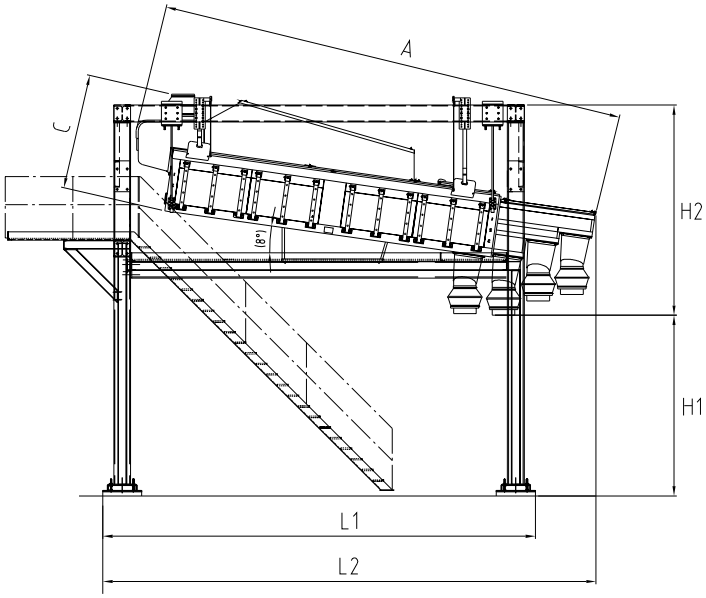

DIEFFENBACHER PANELBOARD OY
Wipaktie 1
15560 Nastola, Finland
Phone +358 10 572-9000
dpf@dieffenbacher.com
www.dieffenbacher.com

DIEFFENBACHER

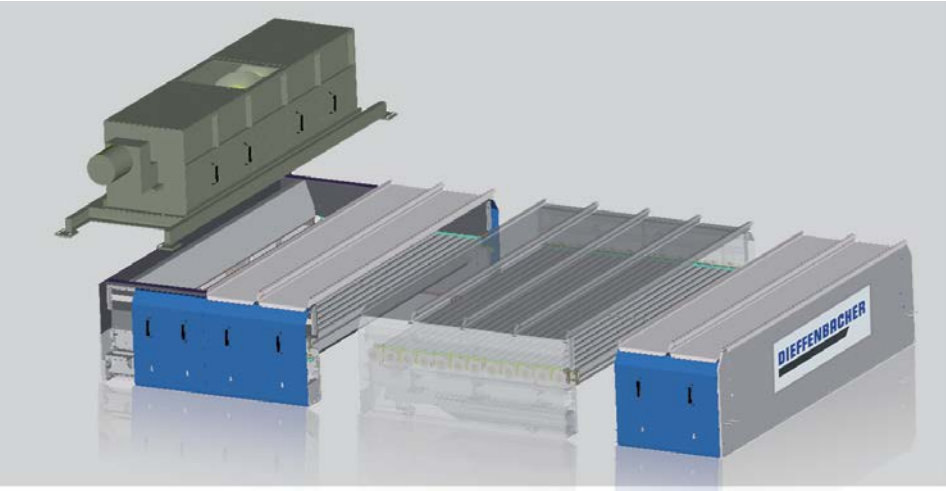

ClassiScreen

Application

- Panel board industry (PB, MDF)
- Pellet plants
- Energy generation

Description

ClassiScreen classifies the material according to thickness by means of gaps between the ClassiRolls. Material is screened into predetermined fractions, for example fines, flakes, mini chips, chips and oversized. The determination of fractions is done by adjustable gaps, roller pattern depth and rotation speed of the rolls. The screen is configured for the needs of the process.

Customer benefits

- Best screening accuracy with high precision ClassiRolls
- Non-plugging, strong double drive system
- Efficient thickness screening
- High capacity per screening area
- Low energy consumption, maintenance costs, dust emissions and noise level

Technical features

- ClassiRolls can be selected according to screening application:
  - *Standard Plus* for screening fresh wood and saw dust
  - *Dura* for screening contaminated wood
  - *DuraPlus* for screening highly contaminated material such as urban waste wood
- Various roll depths available for different applications
- Disc rolls available for bigger fraction separation
- Gaps between the rolls can be adjusted individually according to application requirements
- Roller rotation speed is adjusted by means of a frequency converter drive system

ClassiScreen

Item		Type (Examples)[2] CS 4000 x 2000 / 26+8	CS 4000 x 3000 / 26+8	CS 5000 x 3000 / 32+12	CS 6500 x 3000 / 42+16
Throughput capacity[1]	t/h b.d.	10 – 20	20 – 30	30 – 45	45 – 60
ClassiRoll diameter	mm	80	80	80	80
ClassiRoll rotation speed	rpm	50 – 200	50 – 200	50 – 200	50 – 200
Number of fractions		2 – 3	2 – 4	2 – 4	2 – 5
Installed power	kW	6	6	6	6
Machine weight	t	6	8.5	10	12
Dimensions (L x W)[2]	mm	4,000 x 2,000	4,000 x 3,000	5,000 x 3,000	6,500 x 3,000
Height (H1)	mm	980	980	980	980
Height (H2)	mm	435	435	435	435
Infeed screw diameter[3] (H3)	mm	400	500	630	800

1) Capacity depends on raw material and on screening application
2) Any screen length from 2,000 – 7,000 mm in steps of 500 mm available with width 2,000 or 3,000 mm
3) Infeed screw is optional. Also other feeding methods are available

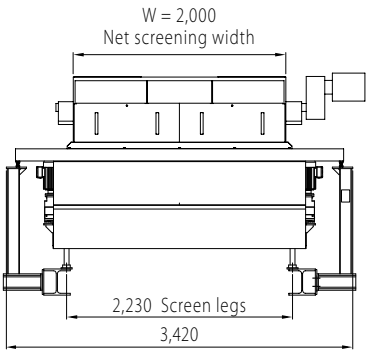

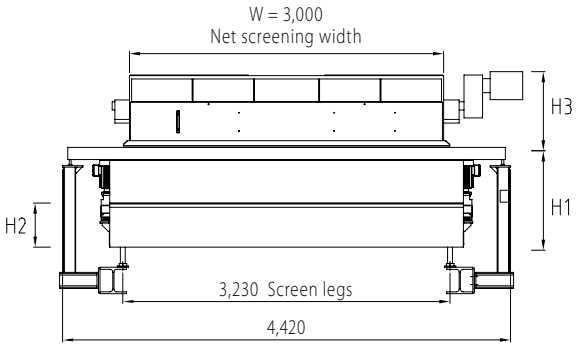

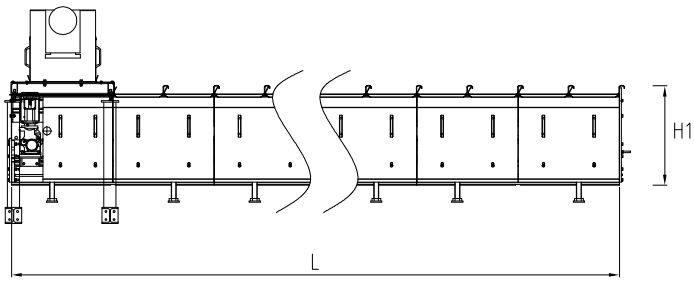

DIEFFENBACHER PANELBOARD OY
Wipaktie 1
15560 Nastola, Finland
Phone +358 10 572-9000
dpf@dieffenbacher.com
www.dieffenbacher.com

DIEFFENBACHER

ClassiCleaner

Application

- Panel board industry (PB, MDF)
- Recycling plants
- Pellet plants
- Energy generation

Description

The ClassiCleaner system consists of integrated roller screening and air separation units, which – in an innovative way – combine both high cleaning effectiveness and high energy efficiency. Furthermore, the infeed material mix is screened into different fractions, which are helpful for further processing.

Customer benefits

- Efficient mineral separation – maximum wood yield
- Less wear of flaking tools, cyclones, ducting, cutting blades, etc.
- Low energy consumption, low emissions
- Compact design with integrated screening and cleaning
- Minimum dynamic loads, light foundations

Technical features

- ClassiRolls with different patterns, gaps and rotation speed enable effective screening according to screening process requirements
- Collection of different fractions under the screen rolls
- Cleaning of mineral enriched material mix with small air separators
- Removal of foils with suction from the roller bed
- Total cleaning efficiency up to > 90 % and wood yield up to > 99 %
- FE and non-ferrous separators and optical sorting
- Optional: water bath for rejects to recover remaining wood from rejects
- Typical dimensions needed for the installation: 10 x 10 x 12 m approx. (L x W x H)
- Capacity range 10 – 60 t/h b.d.

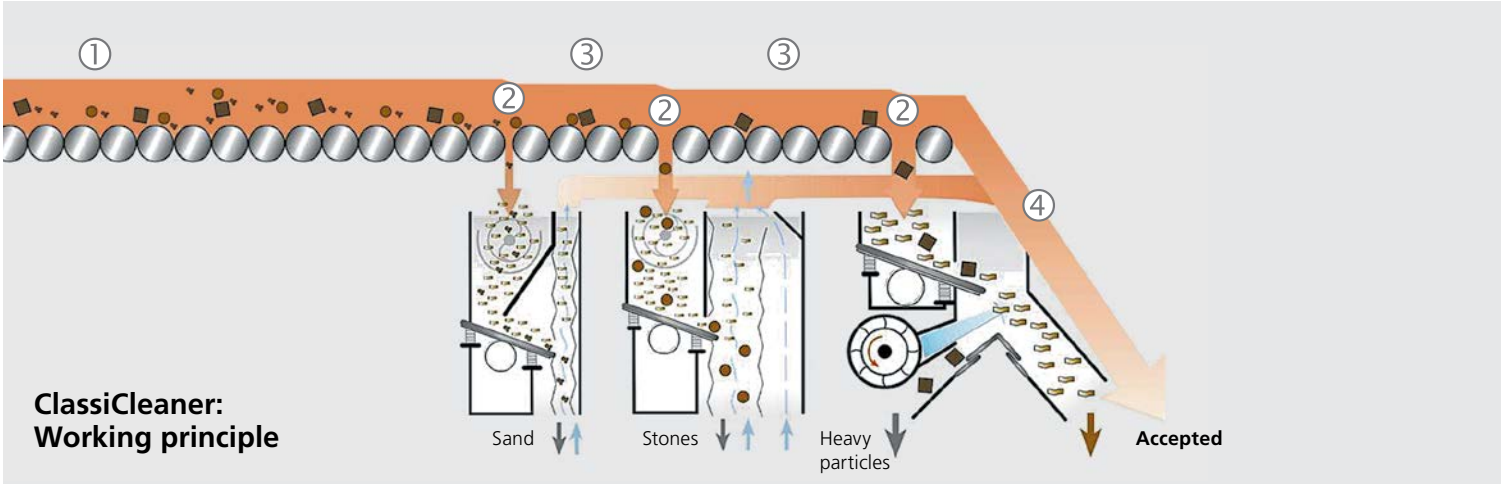

ClassiCleaner: Working principle

① All rolls in the roller bed rotate in the same direction, shaking and conveying the material towards the rear end of the screen. The finest fraction (e.g. sand and dust) is separated in the first roller section and accordingly the coarse fractions are separated later on the coarser section(s).

② Mixture of wood and impurities move along the roller bed, heavy contaminants are concentrated and form a mineral-enriched layer on the roller bed. Mineral-enriched layer is taken out in a larger gap. This sub-flow is further cleaned in an air cleaning unit.
Sand and stones are separated by airflow and the wood material is returned to the process via cyclones.

③ Defined by roller pattern and gap size (smaller than previous "removal gap" for enriched material) the fractions to be separated go through the gaps of the rollers and fall under the roller bed for future processing.

④ The accepted chips pass the whole roller bed and are collected for further processing.

DIEFFENBACHER PANELBOARD OY
Wipaktie 1
15560 Nastola, Finland
Phone +358 10 572-9000
dpf@dieffenbacher.com
www.dieffenbacher.com

DIEFFENBACHER

MVS Sifting Table

Application

- Panel board industry (e.g. cleaning of fines for surface layer)
- WPC/ WFC industry
- Pellet industry
- Combustion (energy from waste)
- Cleaning of grain

Description

The MVS Sifting Table enables effective cleaning of dry or semi-moist finely ground material from minerals, heavy impurities, dust and foils.
The material is fed from above. The light fraction is separated by air flow, blown from underneath of the inclined screen into the lower discharge. The heavy particles are moved to the upper discharge by vibration of the screen. The dust and foils are sucked into a cyclone.

Customer benefits

- High cleaning efficiency of flakes and fines, e.g. for combustion (energy from waste)
- Separation of heavy particles from rejects after CL or SL wind sifters
- Pre-cleaning of fines for more effective combustion and lower combustion chamber maintenance
- Fast return on investment by gaining additional raw material for production or burning
- Low operation and maintenance costs, low energy consumption

Technical features

- Fraction separation on the basis of different specific weights
- Numerous adjustment possibilities like screen inclination and perforation, vibration frequency and amplitude, air volume and speed
- Easy exchange and cleaning of the screen
- Recirculating air operation or aspiration
- Dust-free operation due to closed casing

MVS Sifting Table

Type Working width/length mm	Capacity[1)] t/h b.d.	Table Drive kW	Fan Drive kW	Dimensions m (L x W x H)	Weight approx. t
MVS 590 /1000	0.8	0.37	3	1.9 x 1.2 x 1.4	0.6
MVS 1000 /1000	1.3	0.55	4	1.9 x 1.6 x 1.4	0.7
MVS 1200 / 1250	1.7	0.55	4	2.0 x 1.8 x 1.4	0.8

1) Depending on specific weight and size of the material to be cleaned

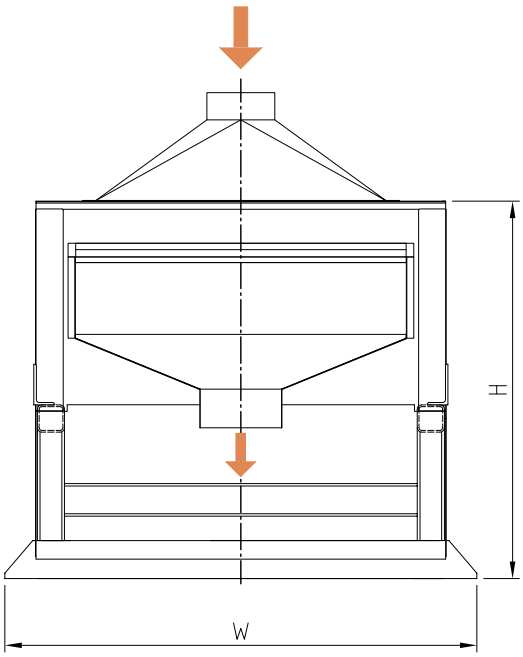

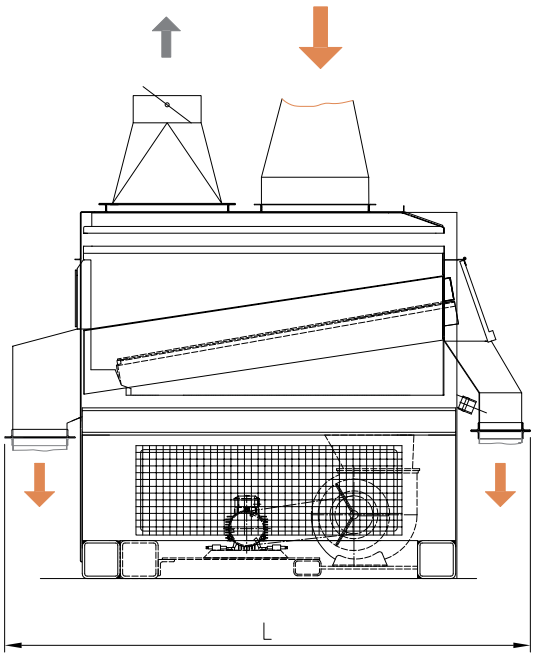

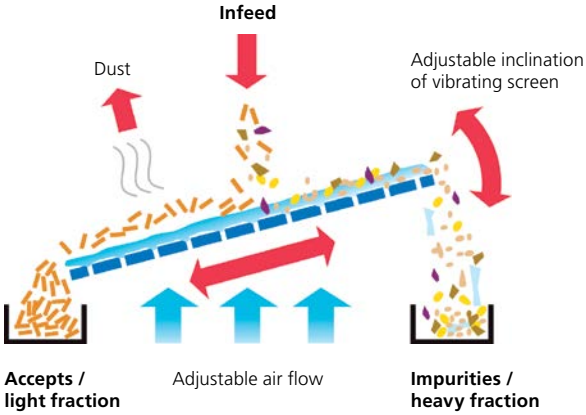

B. MAIER Zerkleinerungstechnik GmbH
Dieffenbacher Group
Schweriner Straße 1
33605 Bielefeld, Germany
Phone +49 521 584943-20
mzb@dieffenbacher.de
www.maier-dieffenbacher.de

Sales Department
Phone +49 521 584943-40
Service and Spare Parts
Phone +49 521 584943-80

SE Sifting Unit

Application

- Panel board industry (PB, MDF, OSB)
- Pellet and briquette industry
- Recycling industry

Description

The SE Sifting Unit is a cost-efficient solution for the effective cleaning of chips and flakes from ferrous and heavy impurities as well as from light-weight contaminations.
The sifting unit consists of a VC Vibration Conveyor, a permanent magnet drum, a HPS Heavy Particle Separator and an air expansion box with integrated rotary valve, mounted at the supporting frame.

Customer benefits

- Cost-efficient solution
- Designed for humid and dry material applications
- Effective cleaning from impurities
- Modularly expandable
- Easily adjustable

Technical features

- High capacity per unit
- Including VC Vibration conveyor with dust cover for clean machine operation (see page 48)
- Variously perforated, exchangeable screens for VC Vibration Conveyor available
- Magnet drum with adjustable discharge point
- Expansion box with special wear protection

SE Sifting Unit

Type	VC Vibration Conveyor[1] mm (W x L)	HPS Heavy Particle Separator mm (W)	Air quantity suction m³/h	Installed power[2] kW	Capacity[3] t/h b.d.	Dimensions[4] m (L x W x H)	Weight[4] approx. t
SE 750 / VC 650	650 / 2,050	750	8,000 – 10,000	7	12	4.0 x 1.4 x 4.7	2.8
SE 1000 / VC 900	900 / 2,050	1,000	11,000 – 13,000	9	14	4.0 x 1.6 x 4.9	3.5

1) Standard execution; optional with special fine hole screen or with special fine hole and oversize screen available
2) Consisting of drive power of VC Vibration Conveyor, magnet drum, HPS Heavy Particle Separator and rotary valve
3) Depending on input material, based on bulk density of 150 kg/m³ b.d.
4) Dimensions and weight of machine without supporting frame

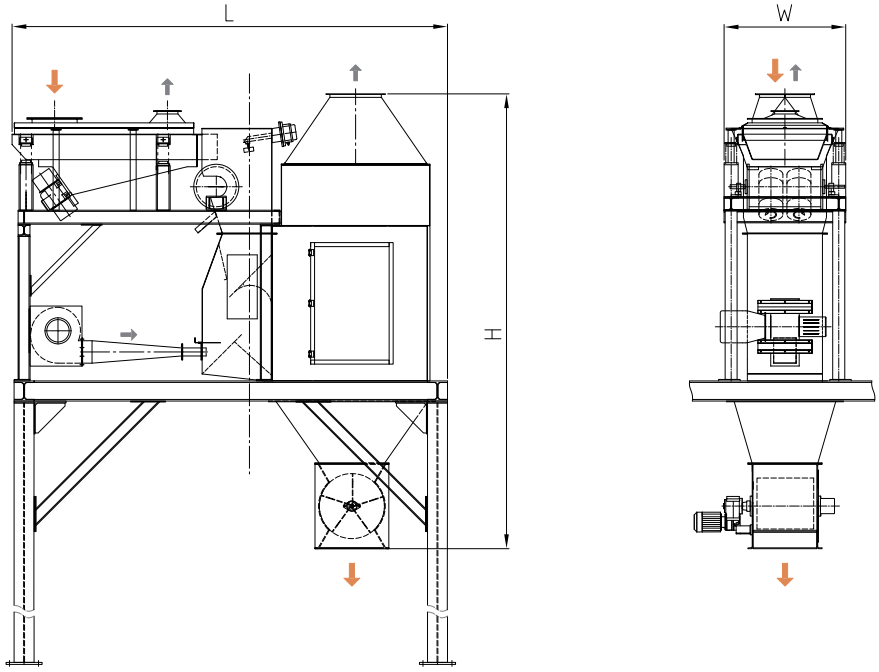

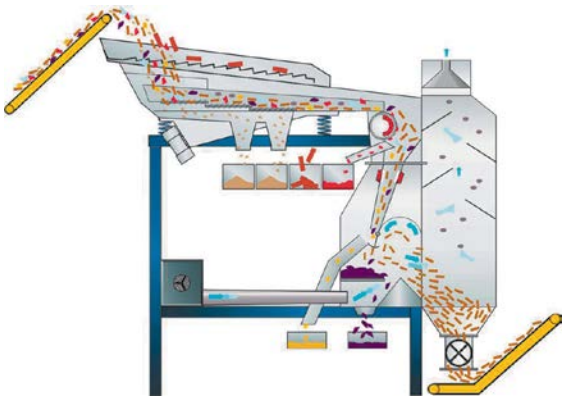

B. MAIER Zerkleinerungstechnik GmbH
Dieffenbacher Group
Schweriner Straße 1
33605 Bielefeld, Germany
Phone +49 521 584943-20
mzb@dieffenbacher.de
www.maier-dieffenbacher.de

Sales Department
Phone +49 521 584943-40
Service and Spare Parts
Phone +49 521 584943-80

SGH Heavy Material Air Grader

Application

- Particle board industry
- Separation of foreign objects from raw chip material
- Removal of impurities such as coarse pieces of wood, stones and nails

Description

The SGH sifter splits the incoming material twice into two fractions – accepted material and heavy weight reject. The reject material drops into the reject hopper and is discharged. Accepted material, suspended in the air stream, is pneumatically transported to a high efficiency cyclone. Up to 2/3 of the air can be recirculated.

Customer benefits

- High throughput quantities
- Highest possible level of maintenance-free operation
- Power saving due to Hurritec type separator or cleaning in cyclonic filters

Technical features

- Choice of material infeed:
  - Vibration channel
  - Vibration screen
- Capacity up to 12 t/h dry chips throughput
- Cyclone to material output (or filter if needed)

SGH Heavy Material Air Grader

Type	Capa-city	Vibration feeder No.	Size		Discharge Screw		Discharge rotary valves for coarse material		below cyclone		Main fan
	m³/h		mm x mm	kW		kW		kW		kW	kW
SGH 700	25.0	1	650 x 1600	2 x 0.45	–	–	NDL 560 x 400 SAB7	2.2	HDL 450	3.0	15.0 – 30.0
SGH 1000	36.0	1	900 x 2000	2 x 0.675	–	–	NDL 560 x 560 SAB7	3.0	HDL 550	4.0	22.0 – 45.0
SGH 1250	45.0	1	1200 x 2000	2 x 0.675	U 160 x 1250	1.1	NDL 560 x 560 SAB7	3.0	HDL 550	4.0	30.0 – 55.0
SGH 1500	54.0	1	1400 x 3000	2 x 2.29	U 160 x 1500	1.1	NDL 560 x 560 SAB7	3.0	HDL 550	4.0	30.0 – 75.0
SGH 1750	63.0	1	1650 x 3000	2 x 2.29	U 160 x 1750	1.1	NDL 560 x 560 SAB7	3.0	HDL 650	5.5	37.0 – 75.0
SGH 2000	72.0	1	1900 x 3000	4 x 0.675	U 250 x 2000	2.2	NDL 700 x 600 SAB8	4.0	HDL 650	5.5	45.0 – 90.0
SGH 2500	90.0	2	1200 x 2000	4 x 0.675	U 250 x 2500	2.2	NDL 700 x 600 SAB8	4.0	HDL 650	5.5	55.0 – 110.0
SGH 3000	110.0	2	1400 x 3000	4 x 2.29	U 250 x 3000	2.2	NDL 700 x 800 SAB9	5.5	HDL 750	5.5	75.0 – 132.0

Type[1]	Separator: nominal bore (NB) of pipes for transport / exhaust air / return air -10		-18		-20		-22	
	Type	NB/NB/NB, mm	Type	NB/NB/NB, mm	Type	NB/NB/NB, mm	Type	NB/NB/NB, mm
SGH 700-xx	HEC 125	355 / 355 / 224	HEC 160	450 / 450 / 280	HEC 200	500 / 450 / 280	HEC 180	500 / 500 / 315
SGH 1000-xx	HEC 140	400 / 400 / 250	HEC 224	560 / 560 / 355	HEC 250	560 / 560 / 355	HEC 250	630 / 630 / 355
SGH 1250-xx	HEC 160	450 / 450 / 280	HEC 250	630 / 630 / 355	HEC 250	630 / 630 / 400	HEC 250	710 / 710 / 400
SGH 1500-xx	HEC 180	500 / 500 / 315	HEC 280	710 / 710 / 400	HEC 280	710 / 710 / 450	HEC 315	710 / 710 / 450
SGH 1750-xx	HEC 200	560 / 560 / 315	HEC 280	710 / 710 / 450	HEC 315	800 / 800 / 450	HEC 315	800 / 800 / 500
SGH 2000-xx	HEC 224	560 / 560 / 355	HEC 315	800 / 800 / 500	HEC 315	800 / 800 / 500	HEC 355	900 / 900 / 500
SGH 2500-xx	HEC 224	630 / 630 / 400	HEC 355	900 / 900 / 500	HEC 355	900 / 900 / 560	HEC 400	1000 / 1000 / 630
SGH 3000-xx	HEC 250	710 / 710 / 450	HEC 400	1000 / 1000 / 560	HEC 400	1000 / 1000 / 630	HEC 450	1000 / 1120 / 630

1) Type-suffix -xx to be replaced by separator's no. (-10, -18, -20 or -22)

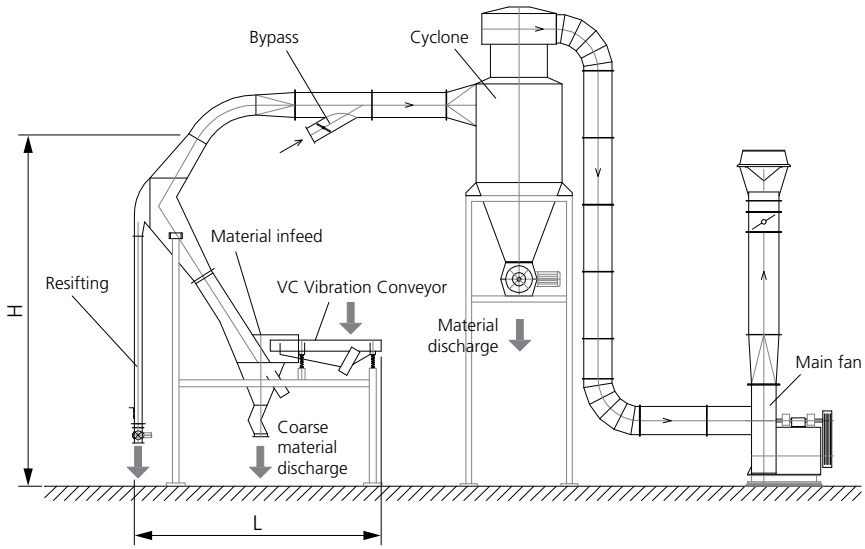

DIEFFENBACHER GMBH
Maschinen- und Anlagenbau
Heilbronner Straße 20
75031 Eppingen, Germany
Phone +49 7262 65-0
wood@dieffenbacher.com
www.dieffenbacher.com

Branch office Leverkusen:
Maybachstraße 35
51381 Leverkusen, Germany
Phone +49 2171 3996-0

DIEFFENBACHER



Air Grader for Particles

Application

- Particle board industry
- Separation of foreign materials such as sand, stones, metal or bark
- Separation for core and surface particles
- Separation of the flakes independent of the flake thickness

Description

The air grader splits the incoming material into three fractions, acceptable, coarse material which includes high density contaminants, wood particles of undesirable geometry (needles, etc.), and material falling through the screen decks (mostly sand, minerals, glass, etc.).
The product enters the suspension chamber (of the air grader) via a rotary valve and a central tube. Agitator arms distribute the material uniformly over the perforated plate through which air is drawn. Different grades of separation are achieved by varying the air velocity. The heavy coarse material is moved to the outside of the grader and leaves the suspension chamber via rotary valves. The accepted material is suspended in the air stream and separated from the air in high efficiency cyclones CS or type Hurritec.

Customer benefits

- Precise separation according to particle thickness and complete thickness control
- Continuous and consistent separation regardless of stop/start operation and variable material flow
- Excellent removal of heavy contaminants
- Maximum accuracy of accepted particles
- Low maintenance costs due to pneumatic/mechanical cleaning system
- Energy and steel structure savings in case of Hurritec type cyclones

Technical features

- Up to 85 % of the air is recycled while the remaining volume is cleaned before venting into atmosphere
- High efficiency cyclones CS or type Hurritec
- Explosion protection system conforming to ATEX regulations
- Air grader suspension chamber with:
  - Agitating device with pneumatic cleaning system
  - Quick change device for the upper screen
  - Conical drilled holes in upper screen deck

Air Grader for Particles

Type	Capacity surface layer				Capacity core layer				
	Installed power	Exhaust air	Thickness of acceptables		Installed power	Exhaust air	Thickness of acceptables		
			0.25 mm	0.4 mm			0.9 mm	1.2 mm	1.5 mm
	kW	am³/h	t/h b.d.	t/h b.d.	kW	am³/h	t/h b.d.	t/h b.d.	t/h b.d.
3,0 R	40.0	4,800	3.0	3.4	70.0	4,900	4.1	5.35	5.5
5,5 R	75.0	8,700	6.8	8.0	110.0	9,000	9.8	13.0	14.0
7,0 R	95.0	11,100	9.5	12.0	135.0	11,400	14.5	19.0	21.0
8,0 R	100.0	12,600	11.0	14.0	160.0	13,000	17.0	23.0	26.0
10,0 R	130.0	15,800	14.0	18.0	195.0	16,200	22.0	28.0	33.0
12,5 R	160.0	19,700	20.0	22.5	235.0	20,300	27.0	36.0	40.0
16,0 R	195.0	25,200	25.6	28.8	355.0	26,000	35.2	44.8	52.0

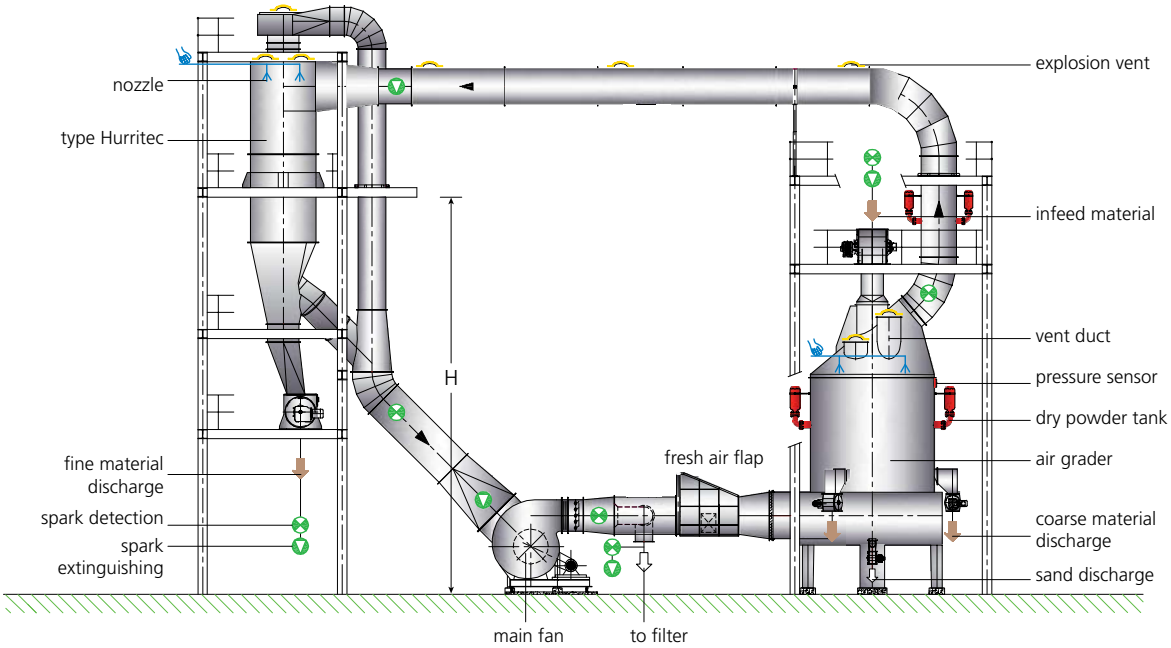

ATEX protection
- for inside installation
- for outside installation
- manual extinguishing
- spark detection and extinguishing

DIEFFENBACHER GMBH
Maschinen- und Anlagenbau
Heilbronner Straße 20
75031 Eppingen, Germany
Phone +49 7262 65-0
wood@dieffenbacher.com
www.dieffenbacher.com

Branch office Leverkusen:
Maybachstraße 35
51381 Leverkusen, Germany
Phone +49 2171 3996-0

SGF Air Grader for Wood Fibers

Application

The SGF-Air Grader is used in the MDF industry for the separation of
- Wood particles
- Glue lumps
- Latex spots
- Coarse fibers

Description

The Air Grader separates the material in the horizontal air flow over two sifting stages. Heavy and coarse material is discharged via screw conveyors and downstream arranged rotary valves. The accepted material is conveyed pneumatically to a high efficiency cyclone. There, the material is separated from the air flow and discharged by a rotary valve.

Customer benefits

- High fiber temperature at low thermal heat demand
- Highest efficiency
- Low exhaust volume because of approximately 70 % of recycled air
- Reduced chance of press damage
- Increase of product quality
- Low maintenance costs due to no movable parts

Technical features

- Design according to ATEX regulations with pressure relief and/or explosion suppression
- Pressure control to enable adjustments of capacities
- No internals which could cause pluggings
- Heating system to maintain the fiber temperature
- Optional spike rollers for opening fiber balls
- Optional infeed rotary valve to avoid inlet of ambient air

Air Grader for Wood Fibers

Type	Capacity incl. moisture & resin for board thickness > 4 mm[1] t/h eff Number of air graders				Main fan kW	Cylone	Exhaust volume m³/h	Heating system kW	mW[3]
	1	2	3	4	P_{shaft}[2]	Type		Axial fan	Heat exch.
SGF 1000/850	8.9	14.8	20.6	25.4	45.6	HEC 224	8,700	3.1	0.25
SGF 1500/850	13.3	22.1	30.9	38.0	68.3	HEC 280	13,100	4.7	0.38
SGF 2000/850	17.8	29.6	41.3	50.8	91.1	HEC 315	17,400	6.3	0.51
SGF 2500/850	22.3	37.1	51.8	63.7	113.9	HEC 355	21,700	7.9	0.63
SGF 3000/850	26.7	44.5	62.0	76.2	136.7	HEC 400	26,100	9.4	0.76
SGF 3500/850	31.2	52.0	72.5	89.1	159.5	HEC 400	30,400	11.0	0.89
SGF 4000/850	35.7	59.5	83.0	102.0	182.3	HEC 450	34,700	12.6	1.01
SGF 4000/950	39.9	66.5	92.7	114.0	203.7	HEC 450	38,800	14.1	1.13

1) For board thickness starting from 3 mm use 90 % and from 2 mm use 80 % of the capacity
2) Fan with direct coupled VFD drive and installed heating system
3) Based on 0°C ambient temperature; standard heat source thermal oil 240/220°C

Motor list	Discharge conveyor		Discharge rotary valve			Main fan	Axial fan	Total installed
	1st stage	2nd stage	1st stage	2nd stage	Cyclone			
Type	kW	kW	kW	kW	kW	kW	kW	kW
SGF 1000/850	3.0	2.2	2.2	2.2	7.5	55.0	4.0	76.1
SGF 1500/850	3.0	2.2	2.2	2.2	9.2	75.0	7.5	101.3
SGF 2000/850	3.0	2.2	2.2	2.2	11.0	110.0	7.5	138.1
SGF 2500/850	3.0	2.2	2.2	2.2	15.0	132.0	11.0	167.6
SGF 3000/850	3.0	2.2	2.2	2.2	15.0	160.0	15.0	199.6
SGF 3500/850	3.0	2.2	2.2	2.2	18.5	160.0	18.5	206.6
SGF 4000/850	3.0	2.2	2.2	2.2	18.5	200.0	18.5	246.6
SGF 4000/950	3.0	2.2	2.2	2.2	18.5	250.0	18.5	296.6

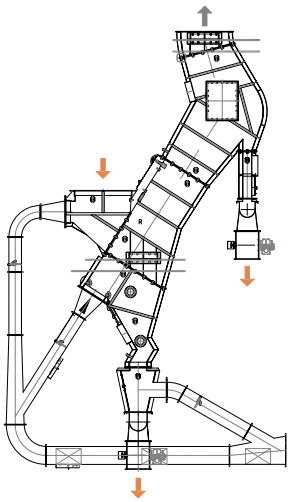

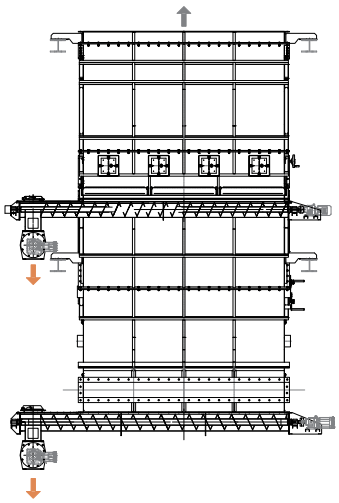

DIEFFENBACHER GMBH
Maschinen- und Anlagenbau
Heilbronner Straße 20
75031 Eppingen, Germany
Phone +49 7262 65-0
wood@dieffenbacher.com
www.dieffenbacher.com

Branch office Leverkusen:
Maybachstraße 35
51381 Leverkusen, Germany
Phone +49 2171 3996-0

DIEFFENBACHER

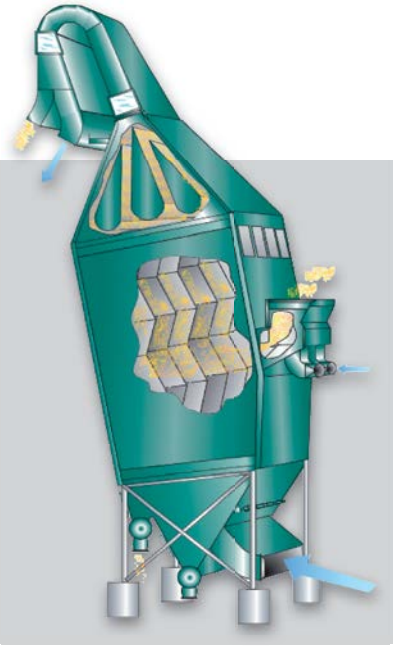

Z-Sifter for Wood Fibers

Application

Used in MDF boards and door skin production for separating:
- Glue lumps
- Latex spots
- Wood particles
- Coarse fibers

Description

Z-Sifter efficiently removes light and heavy contaminants that would have a detrimental effect on the board quality.

Customer benefits

- Protects the machinery downstream, particularly when producing thin boards
- Proven technology and excellent performance also for rubber wood
- Fiber heating offers press production capacity increase

Technical features

- Inlet section with blow box and Coanda separation technology
- Sifter section with unique zig-zag plates
- Two steps of reject collection with distribution plate and vibrator
- Sifter performance controlled via pressure and air flow according to capacity
- ATEX approved

Z-Sifter for Wood Fibers

Item		Parameter
Wood fiber throughput	t/h eff.	up to 50
Rubber tree fiber throughput	t/h eff.	up to 38
Fiber mat temperature at press inlet	°C	50
Width (W)[1]	mm	2,750 – 4,000
Depth (L)[1]	mm	1,570 – 3,000

1) Dimensions depend on desired throughput

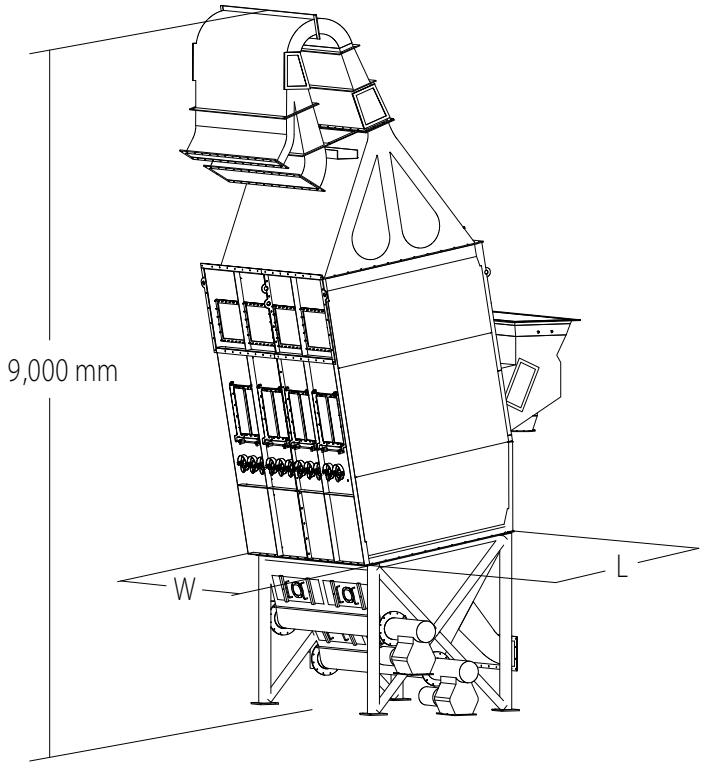

DIEFFENBACHER GMBH
Maschinen- und Anlagenbau
Heilbronner Straße 20
75031 Eppingen, Germany
Phone +49 7262 65-0
wood@dieffenbacher.com
www.dieffenbacher.com

Branch office Leverkusen:
Maybachstraße 35
51381 Leverkusen, Germany
Phone +49 2171 3996-0

Energy Systems

Application

- Combustion of woody biomass with a moisture range of 25 – 55 % (wb)
- Thermal oil heating
- Direct heating of rotary drum dryers
- Direct heating of flash tube dryers
- Process steam generation

Description

Air cooled reciprocating grate firing systems for the combustion of biomass.
The generated heat is used for thermal oil and flue gas applications with wood chips and fiber dryers.
Hot water and steam boilers can also be integrated.

Customer benefits

- Reliable: solid experience and less interfaces as part of an integrated energy and dryer unit
- Efficient: energy generation integrated into the overall process
- Minimized maintenance: typically one cold stop per year

Technical features

- In-house capabilities: combustion calculation, complete process engineering, pipe stress analysis
- In-house designed components: combustion chamber, duct work, reciprocating grates, fuel feeding chutes, hydraulic units, thermal oil heater, pump skids, control circuits and tanks
- Electric efficiency: variable frequency controlled separate fans for different pressure levels, variable frequency controlled pumps for transfer and control circuits, control dampers with electric drives
- Minimum down-time: automatic boiler cleaning during operation with shot cleaning system, low maintenance air cooled grates, stand-by pumps
- Easy to operate: high degree of automation
- Dieffenbacher remote control and online support
- Total combustion capacity up to 85 MW
- Thermal oil heaters 4 – 35 MW


Bark


Fresh wood chips


Saw trim


Sander dust

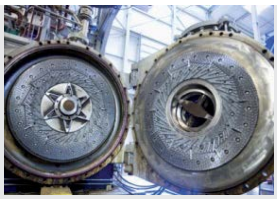
Steam


Hot gas


Thermal oil


Electric power

Example: Co-generation energy system

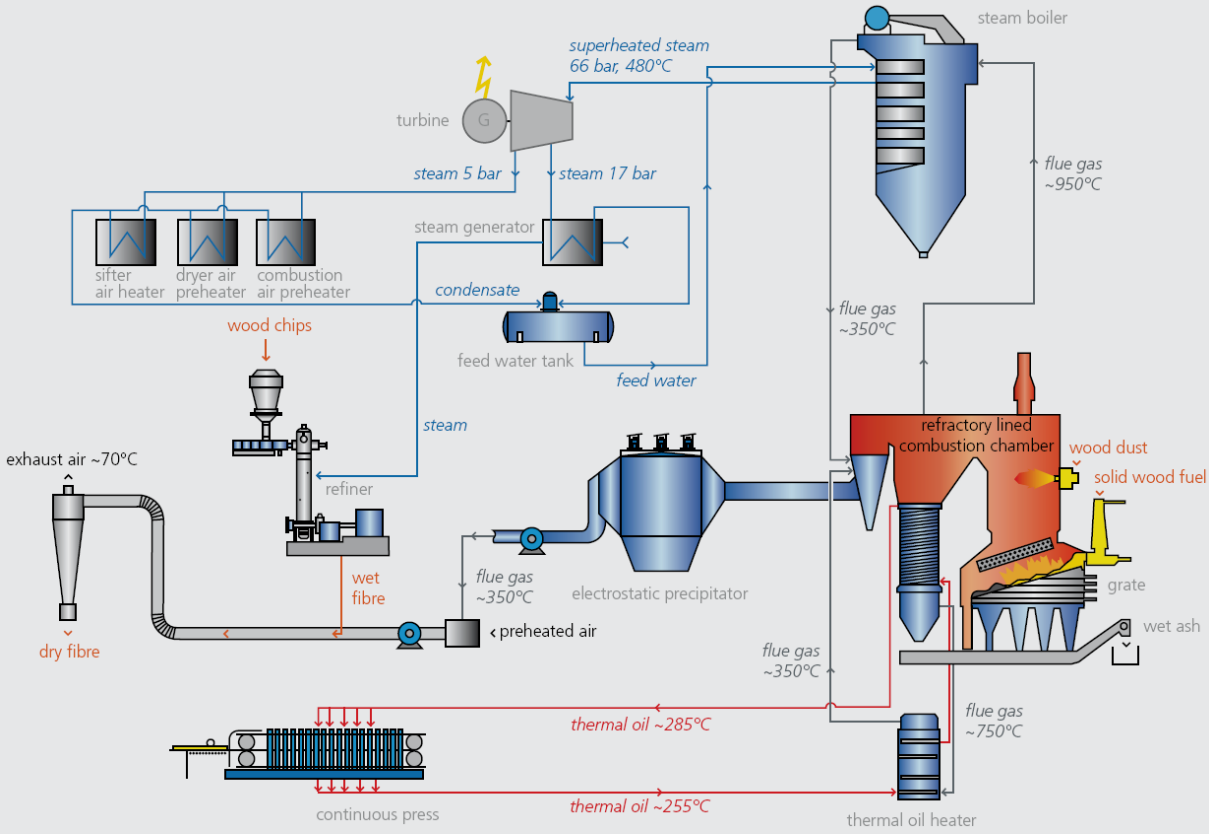

DIEFFENBACHER GMBH
Maschinen- und Anlagenbau
Heilbronner Straße 20
75031 Eppingen, Germany
Phone +49 7262 65-0
wood@dieffenbacher.com
www.dieffenbacher.com

DIEFFENBACHER



TT / TT-LL Drum Dryer

Application

Drying of PB, OSB strands, pellets, wafers, sawdust, bark, disintegrated seasonal annual crops and biomass

Description

Wet material is fed via a rotary valve into the rotating drum. Heat is transferred mainly through convection into the material. Drum Dryer TT-LL separates the dried material with cyclones from the air stream. On the upgraded model TT the drum releases most of the dried material by gravity through a discharge box. In the gas stream suspended fine particles are conveyed to the cyclone battery.

Customer benefits

- High capacity
- Large temperature gradient
- Low fire risk due to low dryer outlet temperature
- High standard of operating safety and reliability
- Low specific energy requirement
- Internals designed according to material characteristics

Technical features

- Explosion protection system conforming to ATEX regulations
- Utilizes recirculation air to reduce exhaust air volume
- TT with discharge box for gentle discharge of the material or of heavy material particles
- Optional: integrated or separate predryer with heavy particle separation and second infeed for reject material from production

Energy sources:
Direct heating, flue gases from
- Gas, dust, light and/or heavy oil burner
- Energy system (e.g. grate firing systems)
- Turbine exhaust gas
- Combination of heating systems mentioned above

Indirect heating
- Heat exchangers with steam or thermal oil for special application

Technical data

- Thick walled drum shell
- Shovels and lifting blades at the inlet
- Alternating sections of cruciform internals and lifting blades
- Minimal air leakage due to proven seal technology
- Drum drive with frequency controlled motor, rotation being transmitted via a chain or girth ring drive
- Drum diameter from 2 m up to 7 m (bigger drums on request)
- Capacities of PB and pellets production: up to 75 t/h b.d. with evaporation rates of 70 t/h
- Capacity of OSB production: up to 50 t/h b.d. with evaporation rate of 45 t/h

TT-LL Drum Dryer

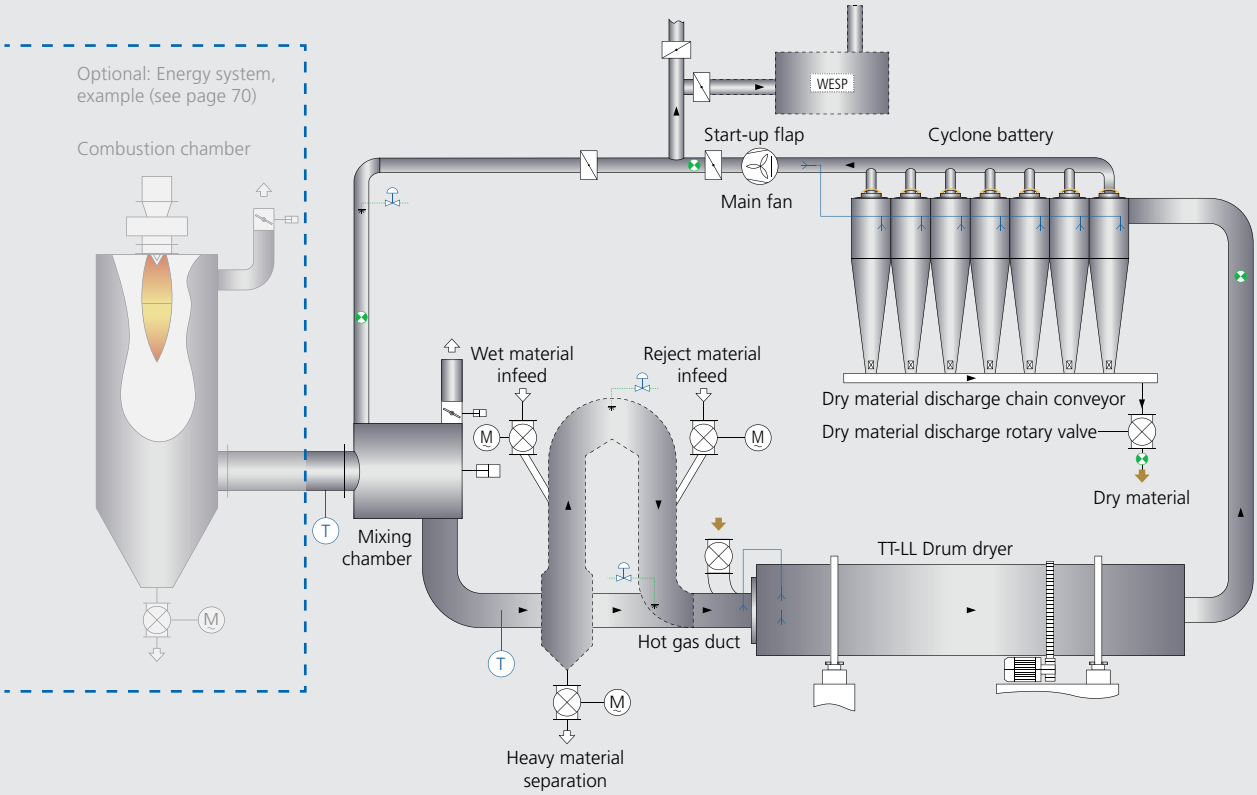

DIEFFENBACHER GMBH
Maschinen- und Anlagenbau
Heilbronner Straße 20
75031 Eppingen, Germany
Phone +49 7262 65-0
wood@dieffenbacher.com
www.dieffenbacher.com

Branch office Leverkusen:
Maybachstraße 35
51381 Leverkusen, Germany
Phone +49 2171 3996-0



FT / FTU / FTZ Flash Tube Dryer

Application

Drying of wood fibers for MDF, HDF and insulation boards

Description

Wet material is injected via a blow-line into the dryer and pneumatically conveyed through the dryer tube and dried to the desired moisture content. High performance cyclones separate the fibers from the gas stream, which are discharged via rotary valves. A portion of the exhaust gases can be reused in dryer installations with recycled air operation.

Customer benefits

- Design and manufacturing according to latest ATEX regulations
- Adapted dryer inlet temperature depending on the type of material and its initial moisture
- High throughput – more than 60,000 t/h b.d. fiber throughput possible
- High standard of operating safety and reliability
- Up to 15 % energy cost savings with an adjustable recirculation air operation

Technical features

- Glued material input via blow-line
- Adjustable final moisture related to downstream processes (e.g. EVOjet M gluing)
- Stainless steel dryer duct (optional)
- Vibration control of dryer main fan
- Temperature control for motor and fan bearings
- Certified explosion panels for explosion pressure relief

Energy sources:

Direct heating, flue gases from
- Gas, dust, light and/or heavy oil burner
- Flue gas from energy system (e.g. grate firing system)
- Turbine exhaust gas
- Combination of heating systems mentioned above

Indirect heating
- Heat exchangers with steam or thermal oil

Exhaust gas for heat recovery
- from pneumatic transport systems
- from EVOjet M systems

FT Single stage fiber dryer
FTU Single stage fiber dryer with recirculation system
FTZ Two stage fiber dryer

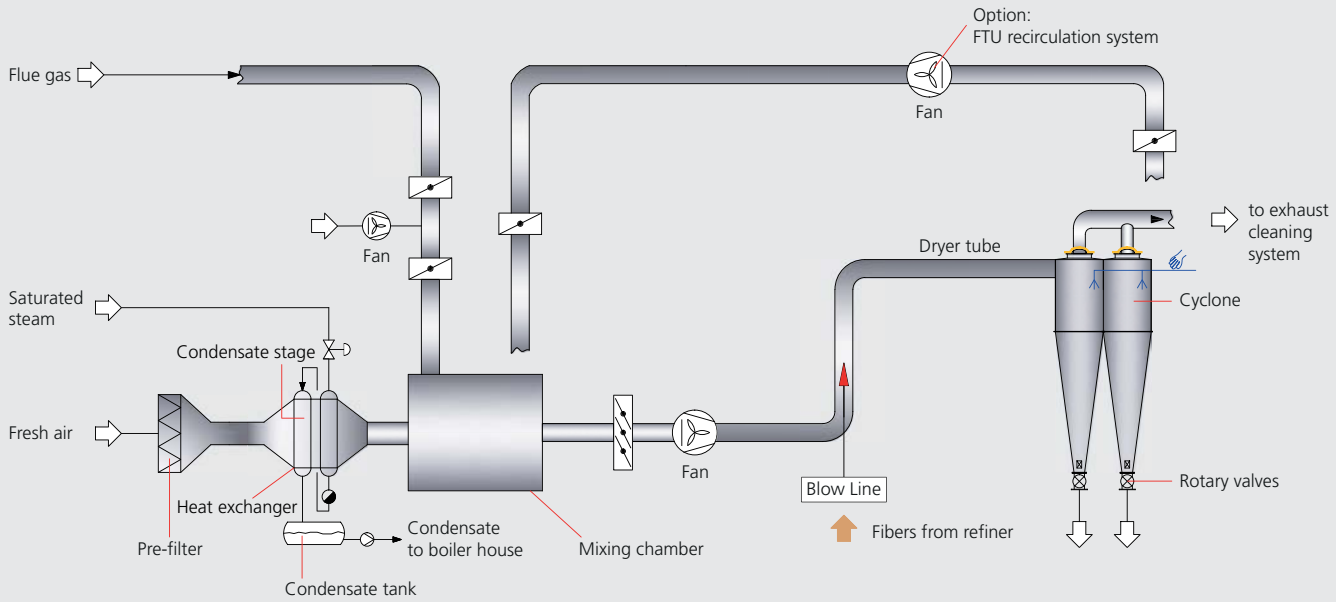

DIEFFENBACHER GMBH
Maschinen- und Anlagenbau
Heilbronner Straße 20
75031 Eppingen, Germany
Phone +49 7262 65-0
wood@dieffenbacher.com
www.dieffenbacher.com

Branch office Leverkusen:
Maybachstraße 35
51381 Leverkusen, Germany
Phone +49 2171 3996-0

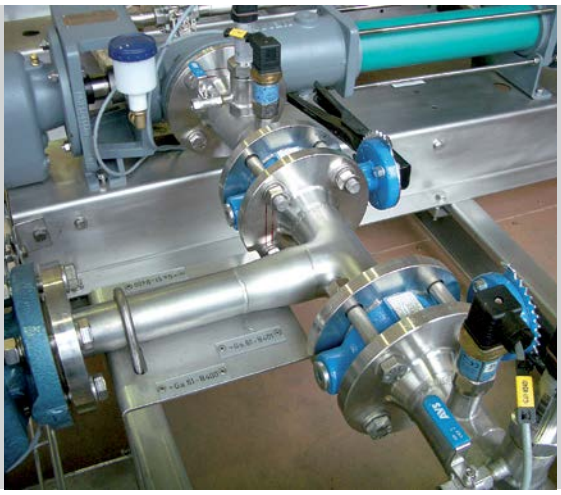

Glue Preparation and Dosing System

Application

Resin and chemical handling and dosing for PB, MDF and OSB mills

Description

Unloading can be either from truck or from train cars directly into storage tanks. Powder handling and diluting systems can be adapted and dimensioned according to site needs. Dosing of components is carried out with adjustable and accurate dosing pumps which are controlled by flow meters and assure optimum material flow.

Customer benefits

- Complete system with fully automatic control and open systems
- Accurate dosing results in direct savings

Technical features

- Storage systems
- Powder dosing systems
- Diluting systems
- Glue dosing systems
  - In-line dosing system
  - Batch dosing
  - Gravimetric dosing

DIEFFENBACHER PANELBOARD OY
Wipaktie 1
15560 Nastola, Finland
Phone +358 10 572-9000
dpf@dieffenbacher.com
www.dieffenbacher.com

DIEFFENBACHER

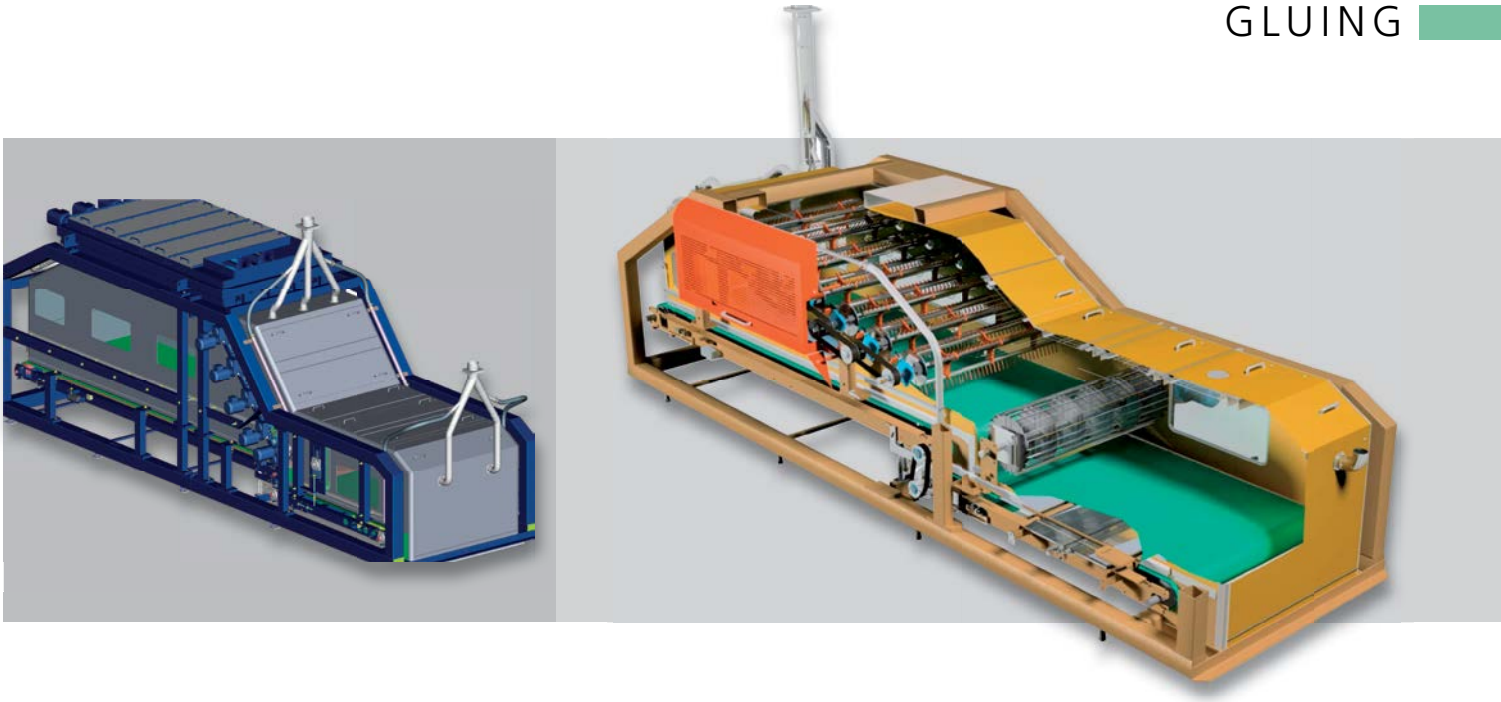

PB Dosing Bin Types SBW and DBW

Application

Surface (SL) and core (CL) flake dosing for particle board gluing

Description

Dosing bins are typically installed for both surface layer flakes (SL) and for core layer flakes (CL). The first task for the bins is to equalize the flake flow from the storage silos to forming. The main task of the bin is to accurately dose the flakes into the blenders. Dosing bins are supplied either with one belt construction (SBW) for lower capacities or with two belt construction (DBW) for higher capacity lines.

Customer benefits

- Accurate dosing of flakes into the glue blenders
- Continuous filling level control with load cells ensures accurate level control
- Accurate mass flow measuring with belt scale

Technical features

- Dosing bin capacity for buffering between the process steps
- Rake rolls inside the bin for equalizing the material flow to the scale
- Belt speed adjustment and control for adjusting the material amount into blending
- ATEX classification: Category 1/3 or 2/3, according to Annex 1 of 94/9/EC used in Zone 20 or 21

Type		SBW-R3-900	SBW-R4-900	SBW-R4-1600	DBW-R7-1600	DBW-R11-2000	DBW-V15-2000	DBW-V20-2000
Dosing belts		1	1	1	2	2	2	2
Discharge capacity	m³/h	55	55	100	130	200	250	460
Discharge width	mm	500	900	1,600	1,600	2,000	2,000	2,000
Bin width	mm	1,800	2,050	2,600	2,750	3,150	3,300	3,300
Bin length	mm	4,300	4,600	5,250	7,950	9,800	9,900	11,100
Bin volume	m³	0.45	0.45	1.65	4.6	5.9	15	20

DIEFFENBACHER PANELBOARD OY
Wipaktie 1
15560 Nastola, Finland
Phone +358 10 572-9000
dpf@dieffenbacher.com
www.dieffenbacher.com

DIEFFENBACHER

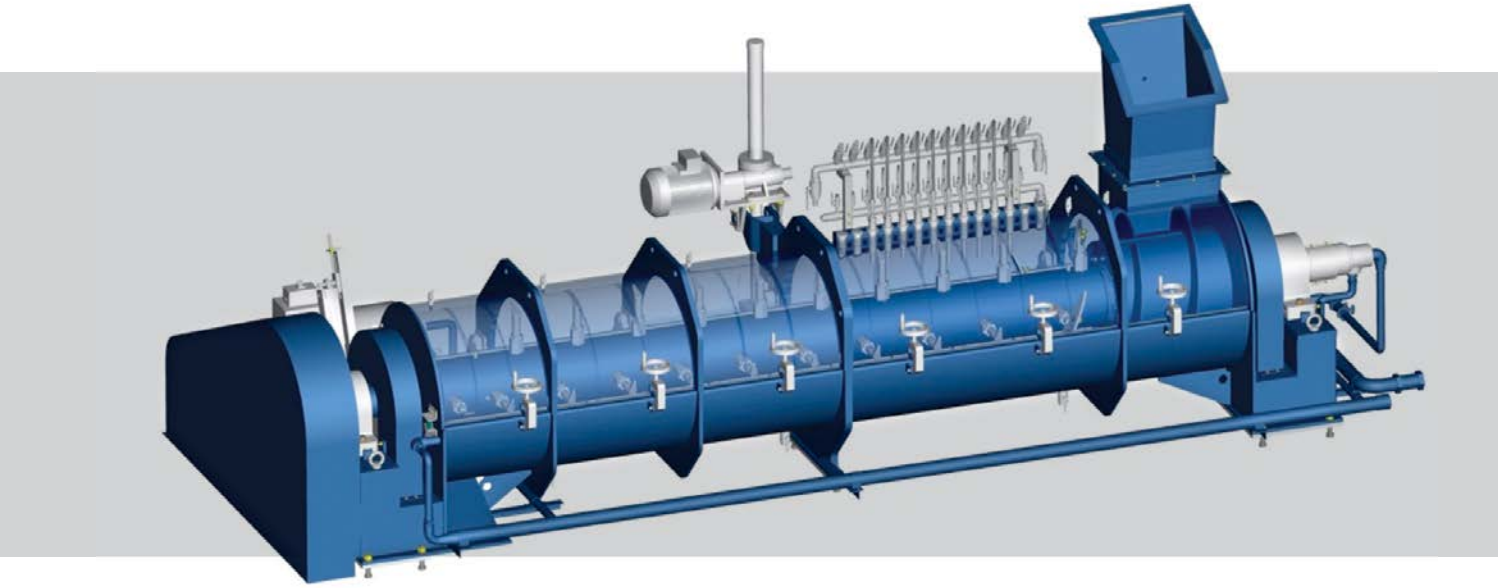

PB Glue Blender

Application

Particle board plants

Description

Glue blenders provide for uniform glue distribution due to large chamber volume and long retention time. A constant filling level of the blender is maintained by a discharge gate to ensure an optimum gluing result. The filling-level adjustment is connected to the weigh scale of the dosing bin and to the power consumption of the main motor.

Customer benefits

- Uniform glue distribution
- Long retention time
- Separate cooling water infeed for shell and shaft
- Open PLC based flap control

Technical features

- Available with either screw intake (CL) or paddle intake (SL)
- Mixing chamber is manufactured with wear-resistant material, highly wear-resistant coating optionally available
- Mixing chamber, mixing tools and discharge chute are water cooled
- Blender retention time adjusted with discharge flap adjustment
- Electrically actuated cover opening

PB Glue Blender

	Type	Chamber mm (D x L)	Capacity[1] t/h b.d.	Power kW	Retention time at max. capacity l/h	Cooling water l/h	Required cooling power kW Flake T / water infeed T ΔT 45°C / 7°C / 5K	ΔT 65°C / 7°C / 7K	Dimensions mm (see drawings below) A	B	C	D	E	F	G
Surface layer blender	CB 48/25 SL	480 x 2500	0.7 – 4.0	37 – 45	21.5	4300	25	34	4127	2130	2500	3028	1525	2040	995
	CB 53/30 SL	530 x 3000	1.2 – 6.0	45 – 55	20.3	6000	35	48	4627	2630	3000	3528	1579	2137	1024
	CB 60/30 SL	600 x 3000	1.9 – 8.0	55 – 75	19.5	7000	40	56	4627	2630	3000	3528	1653	2202	1045
	CB 70/30 SL	700 x 3000	2.5 – 10.0	55 – 75	21.2	8000	46	65	4706	2630	3000	3528	1806	2452	1220
	CB 70/35 SL	700 x 3500	3.1 – 12.0	75 – 90	21.1	9600	56	78	5181	3130	3500	4028	1806	2452	1220
	CB 80/40 SL	800 x 4000	3.7 – 17.0	75 – 90	22.7	12100	71	99	5655	3630	4000	4528	1990	2572	1290
	CB 85/45 SL	850 x 4500	4.4 – 22.0	90 – 110	22.6	16100	93	130	6248	4105	4500	5028	2097	2617	1310
	CB 90/50 SL	900 x 5000	5.0 – 30.0	110 – 132	20.8	20400	118	166	6742	4605	5000	5528	2150	2632	1340
	CB 90/60 SL	900 x 6000	7.5 – 40.0	132 – 160	18.9	24500	142	199	7741	5605	6000	6528	2150	2653	1340
	CB 90/65 SL	900 x 6500	8.5 – 45.0	132 – 160	18.2	26500	153	215	8241	6105	6500	7028	2150	2672	1340
Core layer blender	CB 48/25 CL	480 x 2500	0.6 – 3.2	37 – 45	21.5	4300	25	34	4127	2130	2500	3028	1525	2040	995
	CB 53/30 CL	530 x 3000	1.0 – 4.8	45 – 55	20.3	6000	35	48	4627	2630	3000	3528	1579	2137	1024
	CB 60/30 CL	600 x 3000	1.5 – 6.4	55 – 75	19.5	7000	40	56	4627	2630	3000	3528	1653	2202	1045
	CB 70/30 CL	700 x 3000	2.0 – 8.0	55 – 75	21.2	8000	46	65	4706	2630	3000	3528	1806	2452	1220
	CB 70/35 CL	700 x 3500	2.5 – 9.6	75 – 90	21.1	9600	56	78	5181	3130	3500	4028	1806	2452	1220
	CB 80/40 CL	800 x 4000	3.0 – 14.0	75 – 90	22.0	12100	71	99	5655	3630	4000	4528	1990	2572	1290
	CB 85/45 CL	850 x 4500	3.5 – 17.6	90 – 110	22.6	16100	93	130	6248	4105	4500	5028	2097	2617	1310
	CB 90/50 CL	900 x 5000	4.0 – 24.0	110 – 132	20.8	20400	118	166	6742	4605	5000	5528	2150	2632	1340
	CB 90/60 CL	900 x 6000	6.0 – 32.0	132 – 160	18.9	24500	142	199	7741	5605	6000	6528	2150	2653	1340
	CB 90/65 CL	900 x 6500	6.6 – 36.0	132 – 160	18.2	26500	153	215	8241	6105	6500	7028	2150	2672	1340
	CB 100/65 CL	900 x 6500	8.3 – 42.5	132 – 160	19.0	29300	170	238	8241	6105	6500	7028	2321	3013	1530
	CB 110/65 CL	1100 x 6500	10.0 – 50.0	160 – 200	19.5	32600	189	265	8241	6105	6500	7028	2460	2962	1530
	CB 120/65 CL	1200 x 6500	12.0 – 60.0	160 – 200	19.4	39000	225	317	8241	6105	6500	7028	2668	3022	1530

1) Type SL density 150 kg/m³, type CL density 120 kg/m³

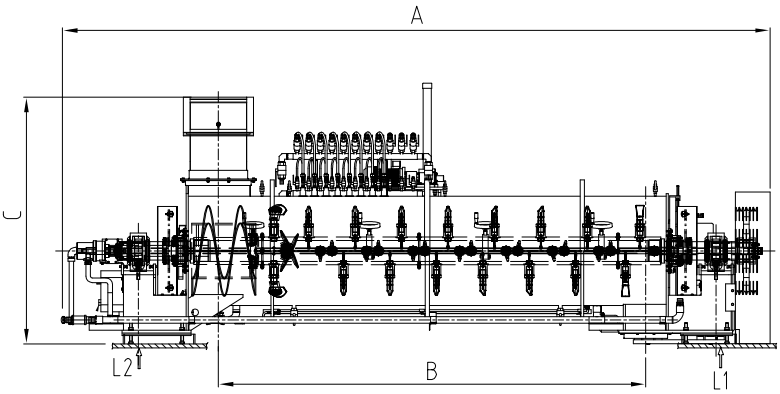

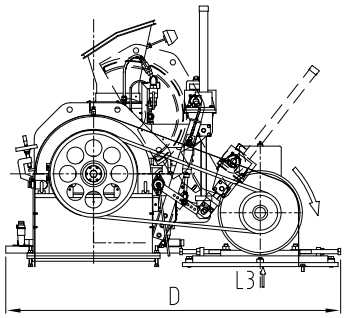

DIEFFENBACHER PANELBOARD OY
Wipaktie 1
15560 Nastola, Finland
Phone +358 10 572-9000
dpf@dieffenbacher.com
www.dieffenbacher.com

DIEFFENBACHER

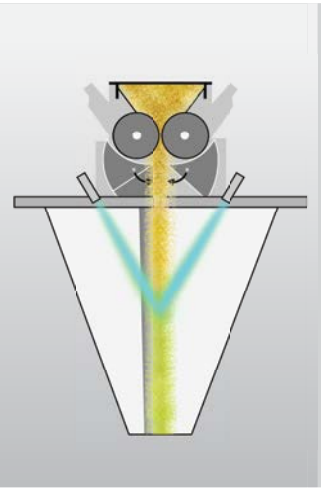

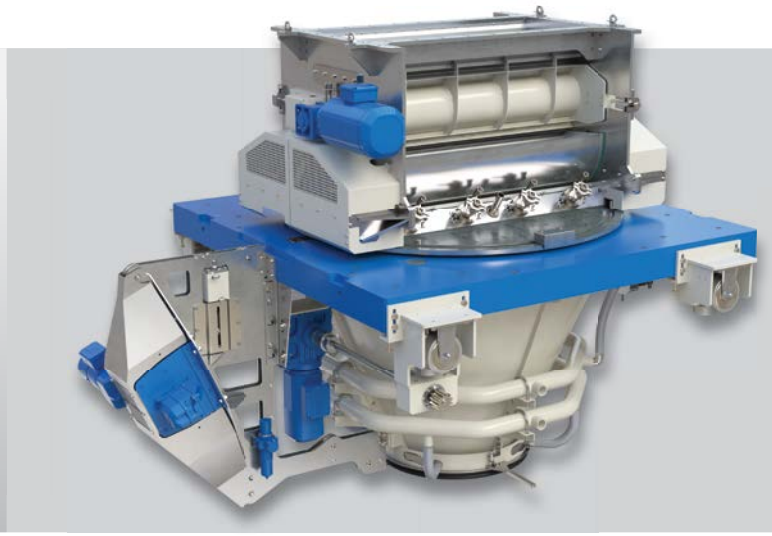

EVOjet P

Application

Core layer blending for particle boards with UF, LPF, MUF or MDI resin

Description

High resin savings in the core layer possible, achieved by finely resin atomized mist due to two-component nozzles and a glue mixture with hardener. The special nozzles produce a homogeneous resin droplet distribution on the particles, no matter which size.

Customer benefits

- Up to 5 kg/m³ solid resin saving compared to common blender technology (up to 15 % resin savings in the core layer)
- Up to 5 % increased press capacity due to steam as atomizing medium and due to increased core layer temperature
- Standard glue pumps can be used

Technical features

- Two fast-rotating spike rollers ensure highest quality board surface
- Special component nozzles for low pressure gluing
- Steam or compressed air as atomization medium
- Internal cleaning units, water cooled swiveling plates and rotating scraper
- All parts in contact with resinated particles are stainless steel

EVOjet P

Type		EVOjet P 1200	EVOjet P 1700
Particle throughput max.	t/h b.d.	40	60
Width particle inlet (B)	m	1.12	1.68
Electric power, approx.	kW	20	25
Weight, approx.	t	4	6
Dimensions (L x W x H)	m	2.83 x 2.19 x 1.93	4.00 x 3.15 x 2.50
Cooling water	m³/h	3	4
Steam consumption	kg/h	320	480
Air consumption	Nm³/h	400	600

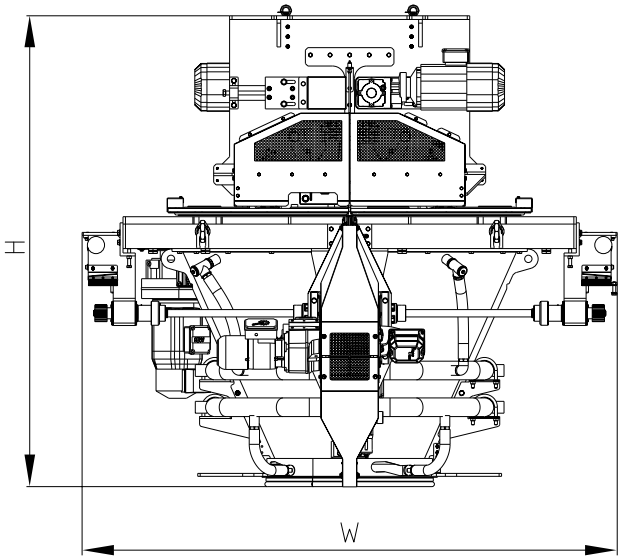

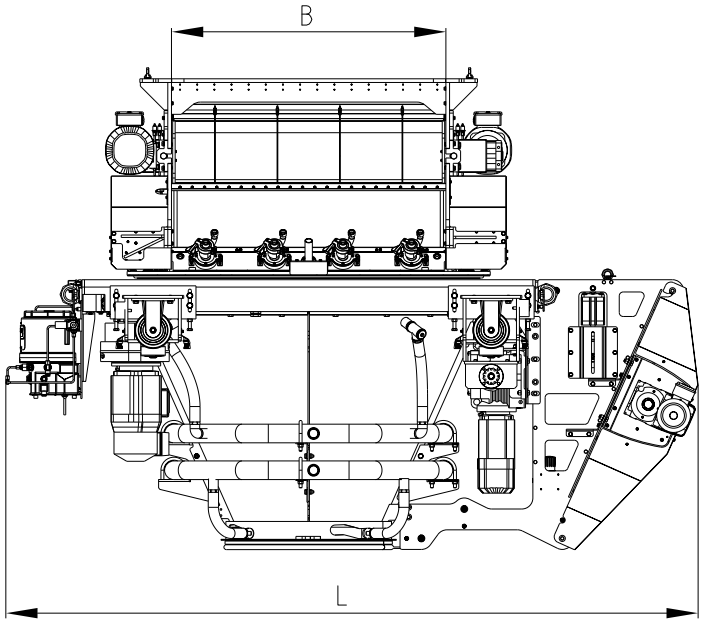

DIEFFENBACHER GMBH
Maschinen- und Anlagenbau
Heilbronner Straße 20
75031 Eppingen, Germany
Phone +49 7262 65-0
wood@dieffenbacher.com
www.dieffenbacher.com

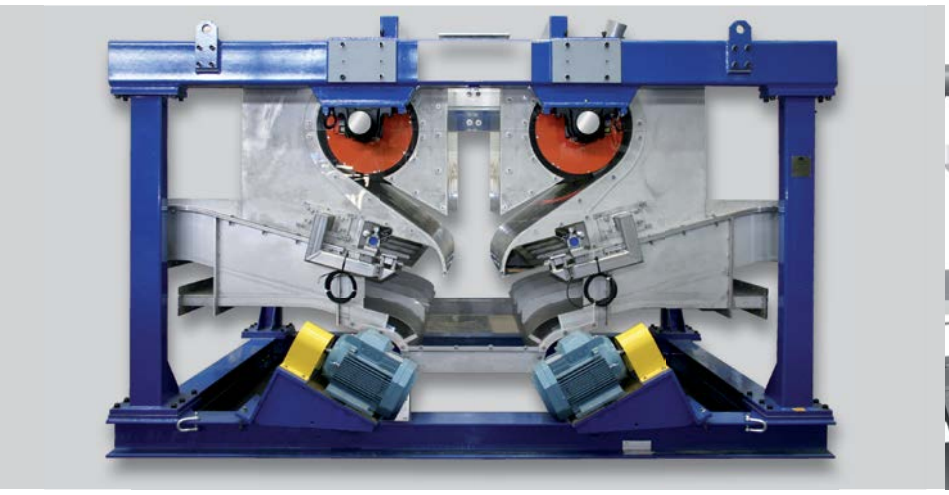

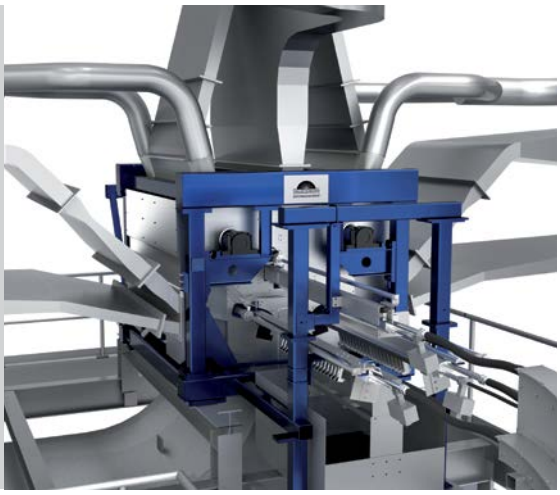

EVOjet M

Application

- Core and surface layer blending for MDF/HDF boards with all kinds of resin
- Insulation board fibers blending
- Door skin core and surface layer blending

Description

The EVOjet M dry resin blending system secures a superior resin application with a combination of a large surface area of fibers in the conveying air and an effective resin distribution.

Customer benefits

- Resin savings up to 30 % compared to conventional blow line
- No extra shutdowns for maintenance needed
- Reduced emissions out of the dryer

Technical features

- Two fast-rotating spike rollers ensure a high quality board surface possible
- Dissolved fiber flow is sprayed with glue
- Special nozzles create a very fine mist of droplets
- Fully automatic cleaning of the nozzles without interrupting the production
- Visual on-line monitoring of the process through windows
- Protective fibers prevent sticking in the air system
- ATEX approved
- System capacity up to 45 t/h b.d.
- Easy access by inspection doors and hatches

DIEFFENBACHER GMBH
Maschinen- und Anlagenbau
Heilbronner Straße 20
75031 Eppingen, Germany
Phone +49 7262 65-0
wood@dieffenbacher.com
www.dieffenbacher.com

DIEFFENBACHER

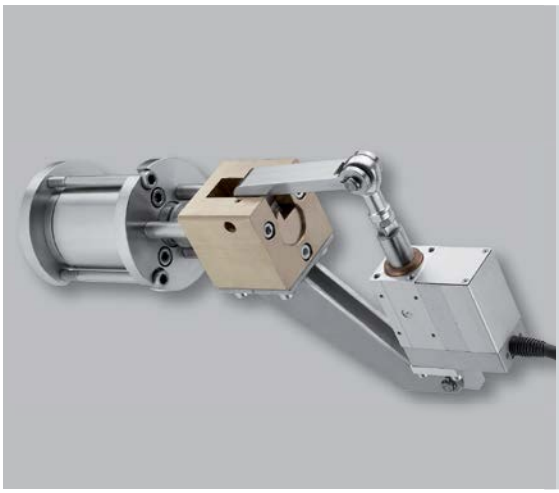

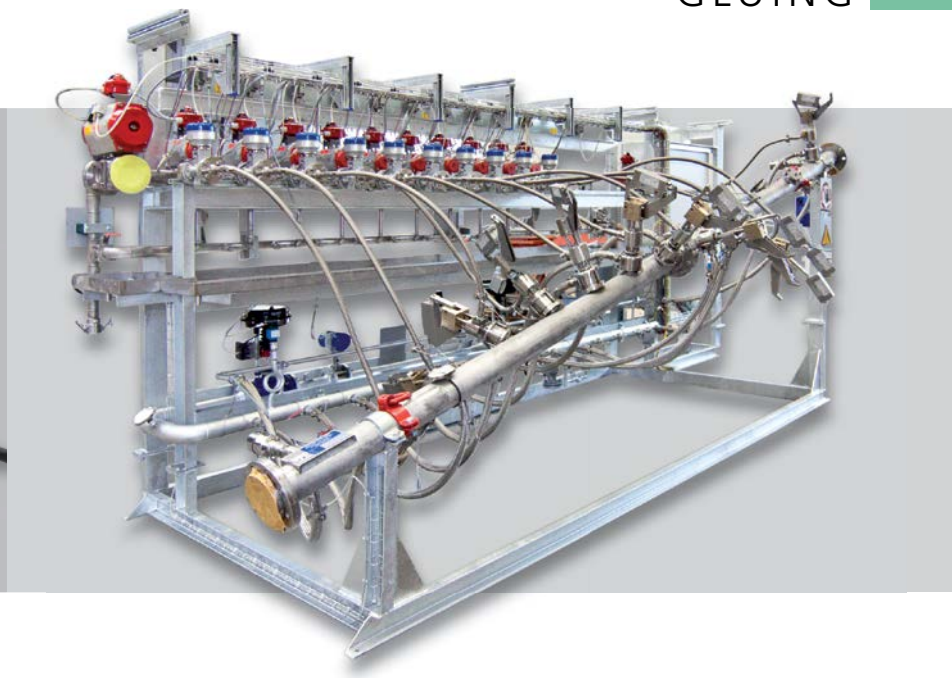

PROjet

Application

Resinating MDF/HDF fibers in blow line

Description

The PROjet system consists of a resin injection spool with steam atomizing nozzles, a distribution unit with valves and sensors and a water booster station for cleaning. Along with experienced blow line engineering and process optimization, resin savings can be achieved. Reduced dryer build-up is an additional benefit when using PROjet.

Customer benefits

- Resin savings up to 15 % compared to conventional blow line
- Higher board quality due to less resin spots on board surface
- Less energy consumption in dryer due to less water addition
- Optimized blow line engineering

Technical features

- Each nozzle gap is individually controlled and adjusted by a linear motor for uniform spray pattern
- Control loop for each nozzle for equal resin distribution
- Pressure control loop

DIEFFENBACHER GMBH
Maschinen- und Anlagenbau
Heilbronner Straße 20
75031 Eppingen, Germany
Phone +49 7262 65-0
wood@dieffenbacher.com
www.dieffenbacher.com

DIEFFENBACHER



Forming Station MDF

Application

Mat spreading for MDF/THDF and insulation board pressing

Description

MDF forming station consists of several single machines (distribution flap, forming bin, discharge head, forming head and Scalper unit), and its purpose is to obtain a uniform fiber mat.

Customer benefits

- Low sanding required due to highest forming accuracy, lengthwise and crosswise
- Excellent board's surface quality, which is highly suitable for laminating or direct painting
- Possible material savings are achieved due to short control loop of the Scalper system and direct return of material to the bin
- Surface structure of top and bottom virtually identical. Separation effect avoided by use of different rollers' designs, their separately adjustable speed and low dropping height
- Reduction of glue lumps possible

Technical features

Bin outfeed rollers with fibre dissolving effect, for line speeds up to 2.5 m/s

Forming Rollers Head

- Board thicknesses: 2.0 – 60 mm
- Rollers equalizing the fibers
- Different roller designs to avoid separation effect

Spike-Roll Vacuum Former

- Board thicknesses: 1.0 – 16 mm
- Spike-Roll disintegrates fibres
- Vacuum pre-compresses the mat and adjusts fibre distribution

Best forming accuracy crosswise with FORMATOR (optional):

- Scalper with separately scalping 100 mm wide segments over board's width, regulated in closed-loop by DIEFFENSOR
- Ability to reduce raw material consumption considerably material is returned to the forming bin

DIEFFENBACHER GMBH
Maschinen- und Anlagenbau
Heilbronner Straße 20
75031 Eppingen, Germany
Phone +49 7262 65-0
wood@dieffenbacher.com
www.dieffenbacher.com

DIEFFENBACHER

CBV Prepress MDF

Application

Wood fiber mat de-aeration prior to MDF/THDF and insulation board pressing

Description

Continuous pre-compression of MDF mat

Customer benefits

- Long degassing zone for good de-aeration of the mat in order to achieve thin mat at press infeed
- Excellent line speed
- No plugging of degassing (precompressor) belt
- Homogeneously compressed mat without blow-out
- Low maintenance due to exhaust and belt cleaning device
- Long lifetime of belts

Technical features

- Precompressor inside spreading wall
- Precompressor and prepress belt cleaning
- Two hinges with different pressure zones
- Pressure applied by compression rollers (not with perforated belt)
- Perforated top belt (optional)
- Max. speed 2,500 mm/s

DIEFFENBACHER GMBH
Maschinen- und Anlagenbau
Heilbronner Straße 20
75031 Eppingen, Germany
Phone +49 7262 65-0
wood@dieffenbacher.com
www.dieffenbacher.com

DIEFFENBACHER

High-speed outfeed rollers with fibre dissolving effect. Small gaps prevent glue lumps and steel belt damages.

Guided fiber flow by multi chamber principle and low air speed with controlled air flow

Forming Rollers Head: No sticking nor blocking of the rollers due to material and geometry of the spikes

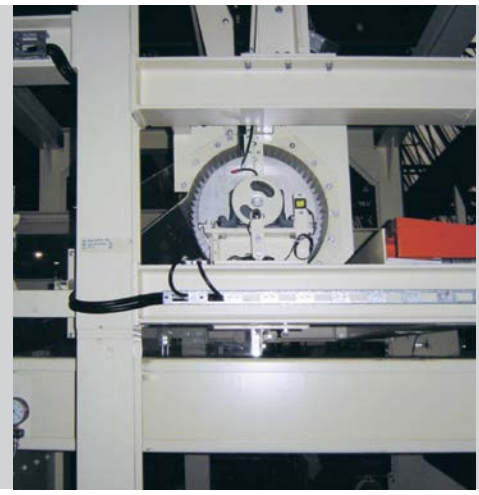

Spike-Roll: Finely dissolving the fibres from above and accelerating them into the vacuum forming area to the right

Forming Station MDF: Working principle

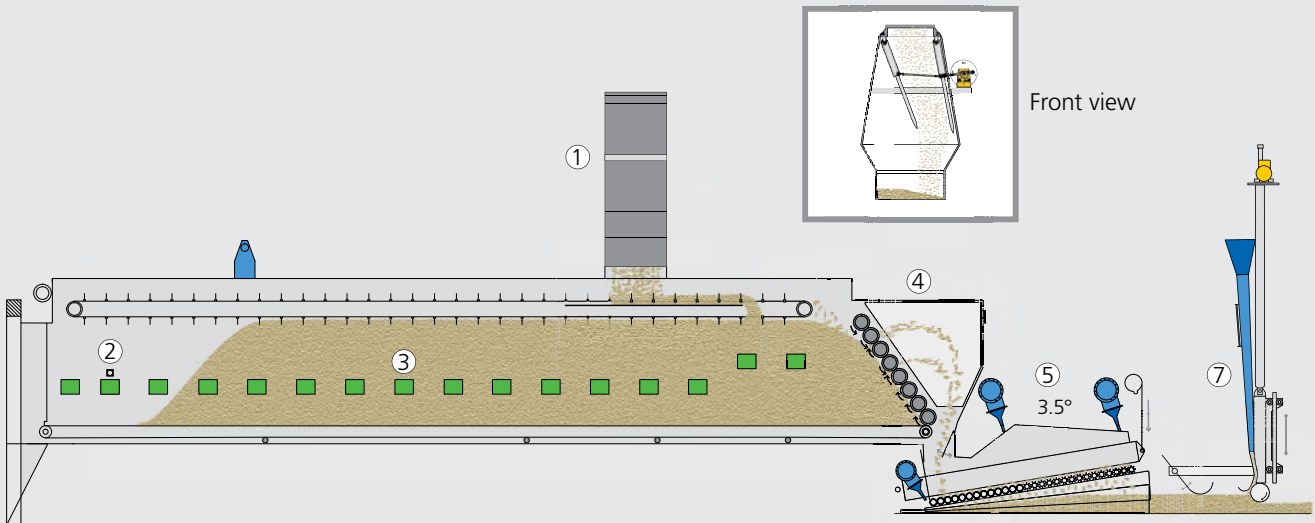

Forming Roller Head

① Distribution flap to forming bin

② Forming bin's filling level sensor

③ Viewing windows

④ Discharge head with dissolving rollers

⑤ Forming head with adjustable inclination

⑥ Spike-Roll Vacuum Former

⑦ Scalper unit (additional option: FORMATOR, see page on the right)

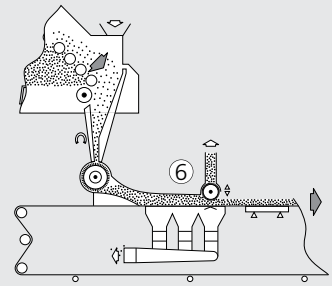

Spike-Roll Vacuum Former

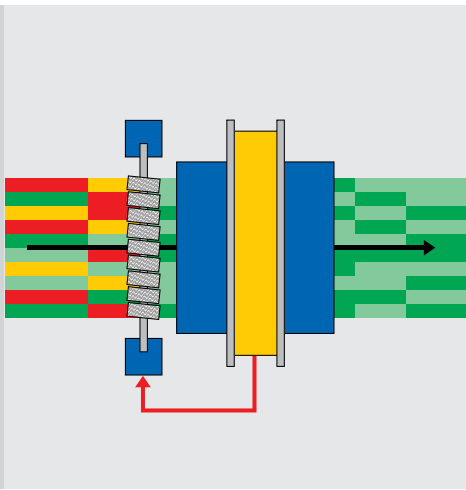

Segmented high-speed Scalper reduces area weight deviations crosswise

DIEFFENSOR senses area densities crosswise and lengthwise with high resolution

Combination is the FORMATOR: Closed loop, acting automatically without operator

Cross distribution with, w/o Scalper 6.4 mm HDF

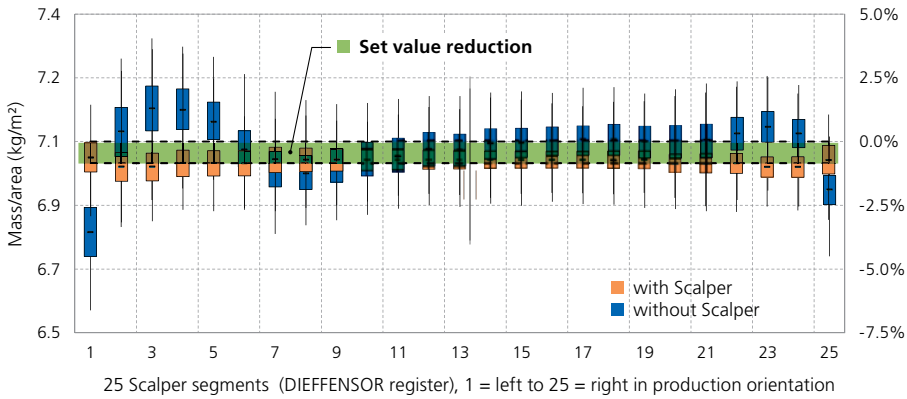

Optional FORMATOR provides increased material efficiency

FORMATOR achieves excellently narrow corridor on density cross-wise, subsequently the system allows extreme savings in raw material consumption.

Lengthwise comparison during 5 h production with, w/o Scalper 6.4 mm HDF

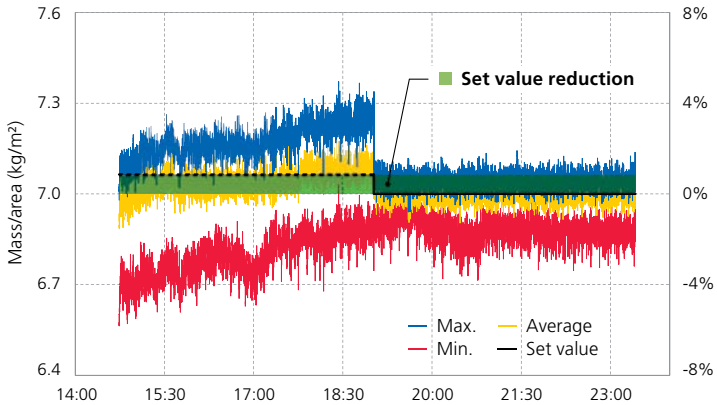

With FORMATOR lengthwise density deviation is reduced extra-ordinarily, which again provides possibility to increase quality and/or save raw material consumption to a high extent.

Forming Station PB

Application

Mat spreading for particle board (PB) pressing

Description

PB forming station's purpose is to spread constant three-layer particle boards. The production capacity ranges from 500 to 3,000 m³ particle boards per day, dependent on device chosen:
- ClassiFormer, the compact mechanical forming device for small and medium capacities
- WindFormer, best practice wind forming device for medium and high capacities

Customer benefits

- Low sanding allowance due to superior forming accuracy, lengthwise and crosswise
- Excellent board surface quality, which is highly suitable for laminating or direct painting due to a highly accurate process (WindFormer)
- Modular system with compact design especially for modernizations (ClassiFormer)
- Optimized weight control loops for fast production starts and changes
- Possibility to process 100 % recycling material

Technical features

WindFormer:
- Separation for surface layer mainly due to wind (particles' weight) in combination with screens
- Separation and reject of glue lumps from the production material (optional roller screen "retrofittable")

  In combination with Spoke Former for core layer (with optional disc separator for glue lump removal)

ClassiFormer:
- Separation by particles' size mainly due to different gaps between the rollers
- Combined dosing bins for both surface layers and core layer (for capacities < 400 m³/h)
- For medium capacities in combination with Spoke Former for core layer

DIEFFENBACHER GMBH
Maschinen- und Anlagenbau
Heilbronner Straße 20
75031 Eppingen, Germany
Phone +49 7262 65-0
wood@dieffenbacher.com
www.dieffenbacher.com

DIEFFENBACHER

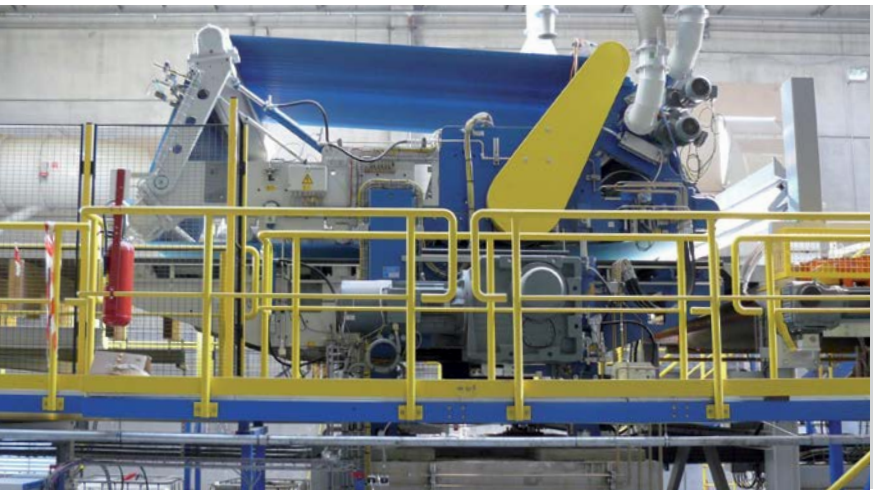

CBV Prepress PB

Application

Wood particles mat de-aeration prior to PB board pressing

Description

Continuous pre-compression of PB mat

Customer benefits

- Long degassing zone for good de-aeration of the mat in order to achieve thin mat at press infeed
- High line speed
- No plugging of degassing (precompressor) belt
- Homogeneously compressed mat without blow-out
- Low maintenance due to exhaust and belt cleaning device
- Long lifetime of belts

Technical features

- De-aeration belt cleaning
- Pressure is applied by compression rollers
- Decompression slightly in order to avoid mat gaps
- Max. speed 1,200 mm/s

DIEFFENBACHER GMBH
Maschinen- und Anlagenbau
Heilbronner Straße 20
75031 Eppingen, Germany
Phone +49 7262 65-0
wood@dieffenbacher.com
www.dieffenbacher.com

DIEFFENBACHER

	Equipment for Surface (S) + Core (C) layer	Capacity
Mechanical forming	CF CF CF CF	300-400 m³/day
	CF RSE CF	up to 1,200 m³/day
	CF RSM RSE CF	up to 2,000 m³/day
Wind forming	WF RSE WF	up to 1,200 m³/day
	WF RSM RSE WF	up to 3,000 m³/day

CF: ClassiFormer, WF: WindFormer, RSM/RSE: Rake spreader head mechanical/electrical

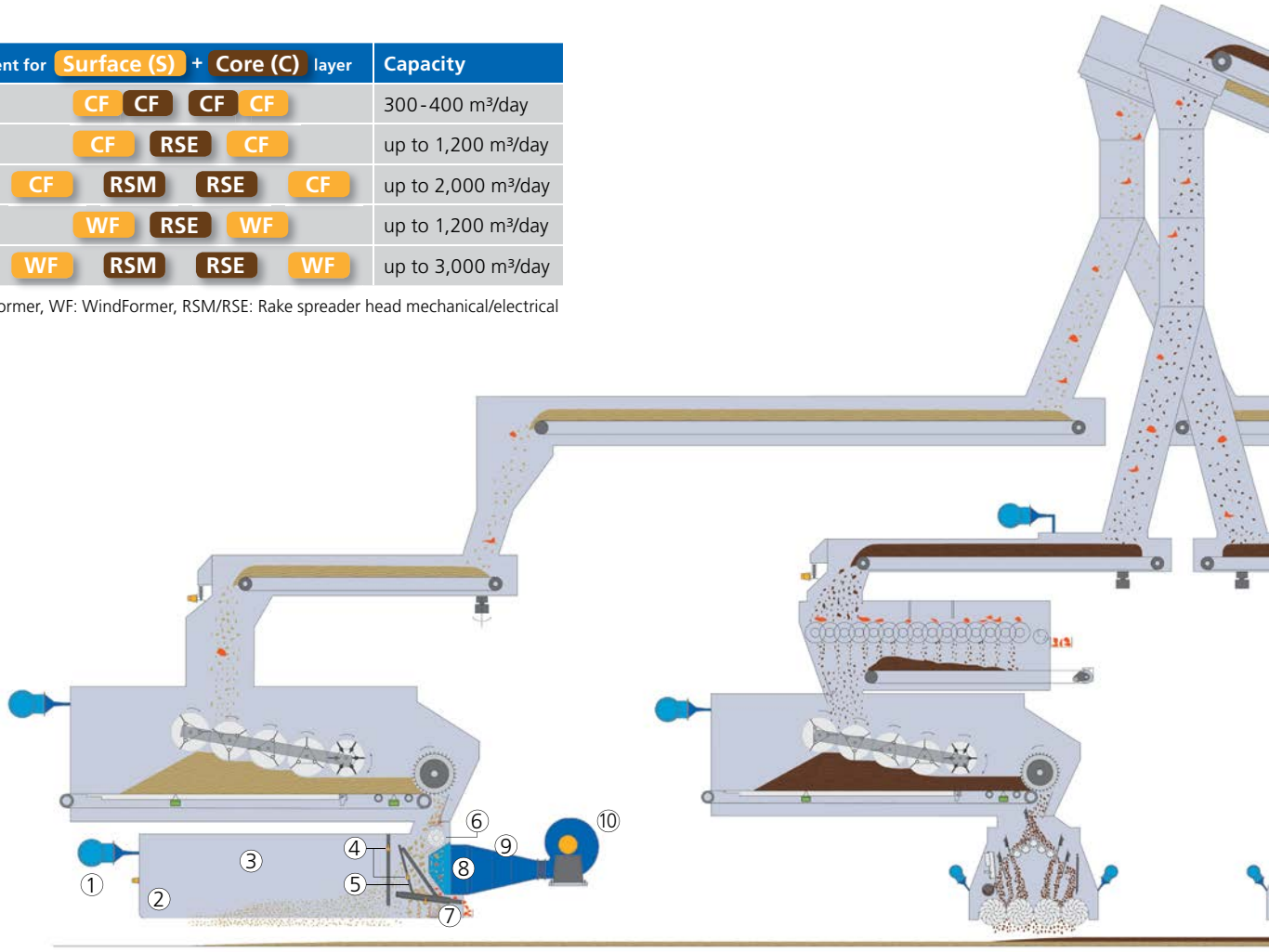

Surface layer

Core layer

WindFormers for surface layers:

① Air exhaust
② Height adjustable air flow guide
③ Wooden corpus
④ Vibratory screens flush glued to walls
⑤ Flush mount screen
⑥ Spoke roller
⑦ Roller deck
⑧ Horizontally and vertically adjustable register
⑨ Diffusor screens
⑩ Radial air fan

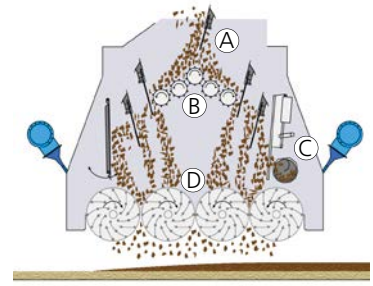

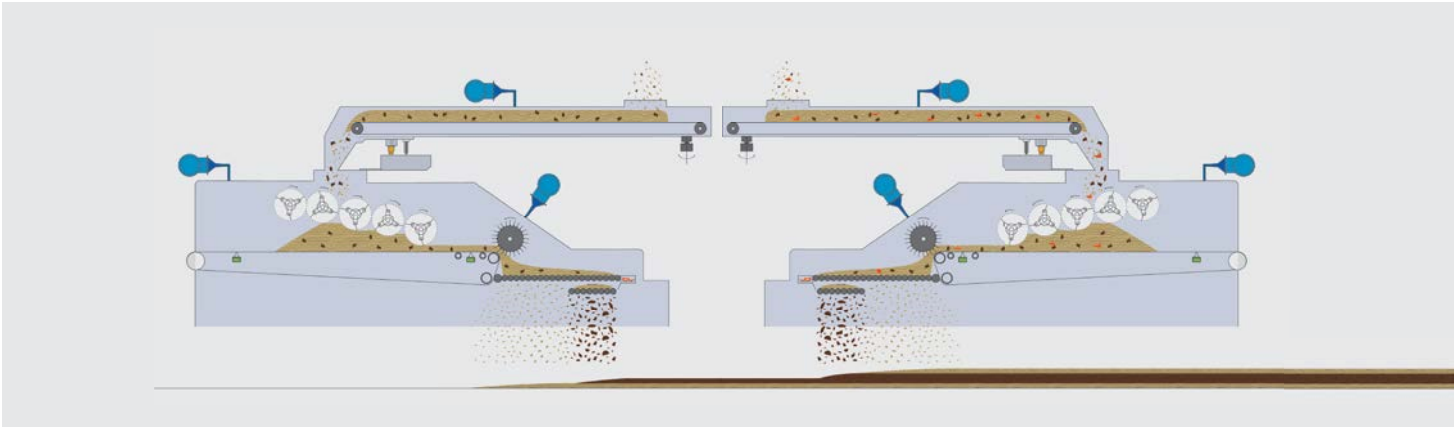

Combined ClassiFormer for both surface and core layer

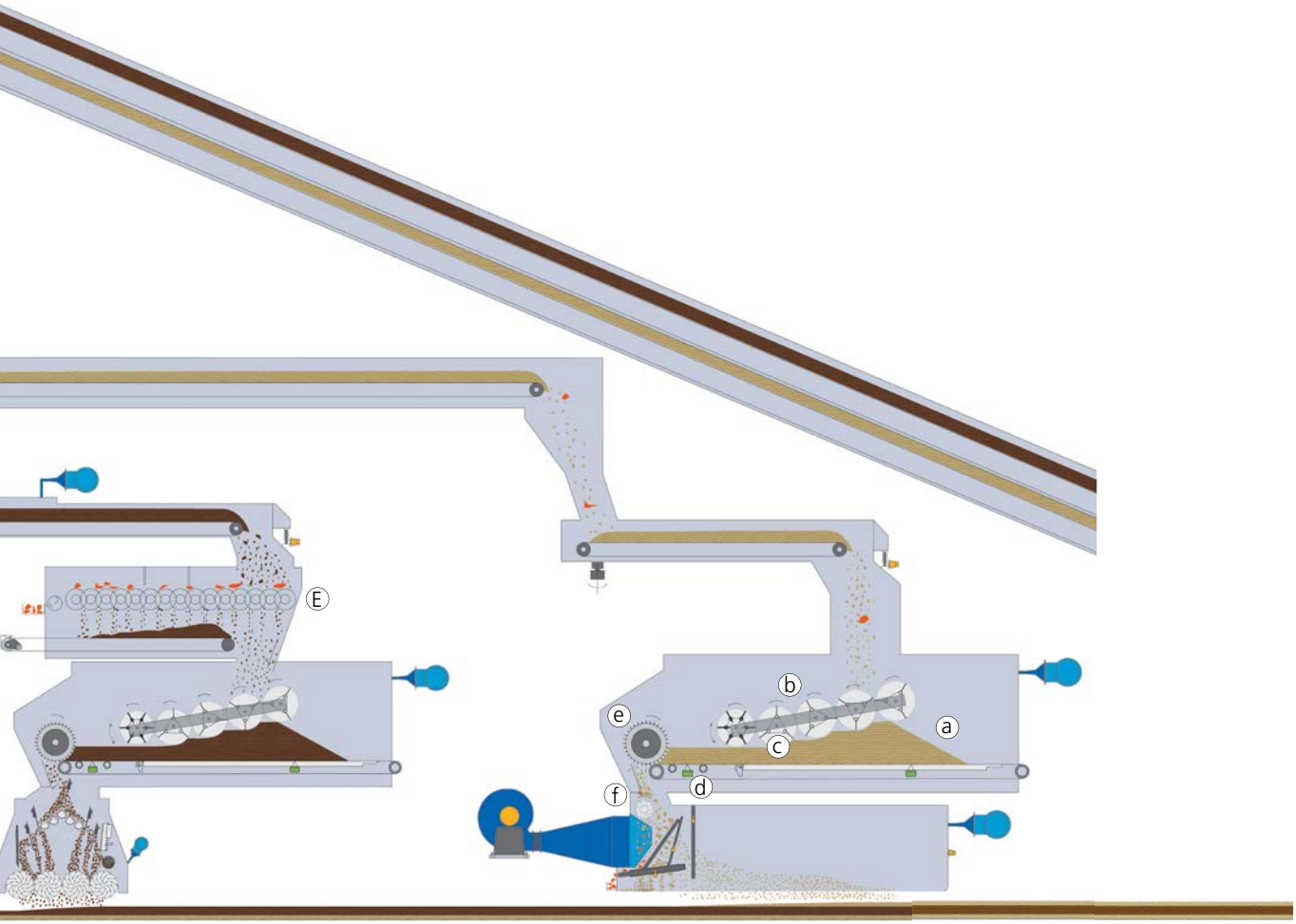

Core layer

Surface layer

Spoke Formers with rake spreader and disc separators for core layer:

Ⓐ Split material flow by rakes
Ⓑ Distribution rollers
Ⓒ Mechanically (RSM) or electrically (RSE) controlled correction module
Ⓓ Spoke rollers
Ⓔ Disc separator for glue lump removal

Universal bins for forming:

ⓐ Wooden interior
ⓑ Paddle rollers
ⓒ Paddle rollers' height control (mechanically, electronically as option)
ⓓ Weight scale
ⓔ Discharge roller dissolves the particles before feeding them into the spreading head
ⓕ Continuous discharge to forming head

ClassiFormers

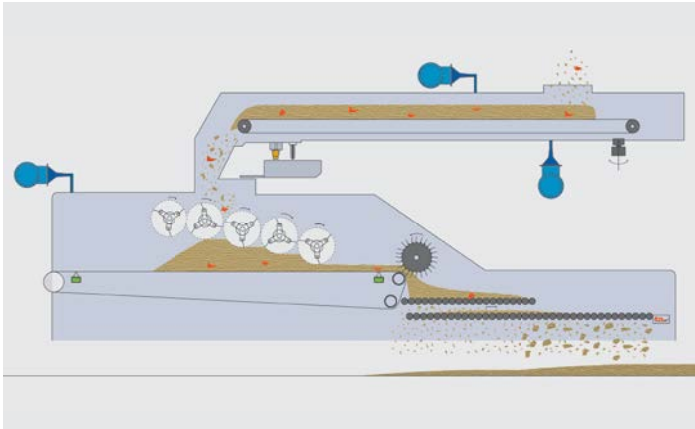

ClassiFormer for surface layer

Forming Station OSB / OSL

Application

Mat laying for OSB/OSL board pressing

Description

OSB Forming Station forms glued strands to an equal and calibrated multi-layer mat. The mat is formed of two symmetrical surface layers with length oriented strands, optional intermediate layers, and a core layer of various finer strands with cross orientation. OSL Forming Station orients both surface layer and core layer strands lengthwise.

Customer benefits

- High board quality due to superior strand orientation
- Excellent strand orientation, lengthwise and crosswise, due to automatic height control of the spreading heads
- Very low area weight deviation, lengthwise and crosswise, due to individual weight control of each layer
- Modular types of spreading heads for all kinds of material (length 40 to 250 mm)
- Optimized weight control loops for fast production starts and changes

Technical features

- Variable ratio between surface and core layer material
- Individual weight control of each layer with mat scales integrated into either the bin or the forming line
- Unseparated or separated core layer former
- Separate automatic height adjustment of each forming head
- Cross belt to separate and reject glue lumps

DIEFFENBACHER GMBH
Maschinen- und Anlagenbau
Heilbronner Straße 20
75031 Eppingen, Germany
Phone +49 7262 65-0
wood@dieffenbacher.com
www.dieffenbacher.com

DIEFFENBACHER

Mat Spray System

Application

PB, MDF and OSB production

Description

High precision spraying system consisting of two units, for spraying water onto the forming belt as well as onto the material to be pressed. If desired, additives (e.g. release agent) can be added to the water.
Adding moisture for quick temperature transfer to the mat's core during press process.

Customer benefits

- Improved board properties and surface quality
- Low press factor
- Integrated into the control system of the line, fully automated
- High uptime

Technical features

- Automatic, exact mixing and dosing of water and additives
- Spray system automatically adjustable in width and height
- Droplet free technique
- Typically 10 to 20 g/m² resp. ml/m² dosing range
- Dimensions of the basic system:
  1.8 x 1.2 x 1.7 m (L x W x H)

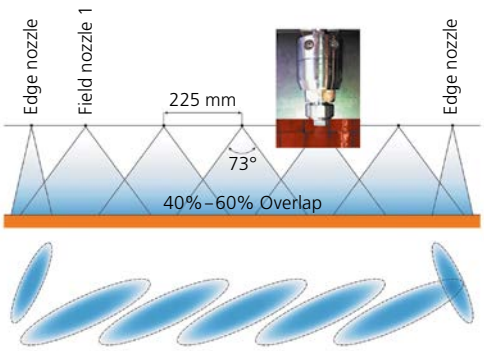

Top view on spray pattern

DIEFFENBACHER GMBH
Maschinen- und Anlagenbau
Heilbronner Straße 20
75031 Eppingen, Germany
Phone +49 7262 65-0
wood@dieffenbacher.com
www.dieffenbacher.com

DIEFFENBACHER

Microwave Preheater

Application

PB, MDF, OSB and LVL board production

Description

Increase of capacity achieved by a higher mat temperature which will be achieved by microwave radiation and direct heat transfer into the core of the mat in front of the press.

Customer benefits

- Increase of production capacity typically by up to 30 %
- Preheating of the complete mat from the core
- No moisture added to the mat
- Short installation time of about 10 days and short start up time

Technical features

- Uniform position of magnetrons in microwave chamber
- Easy maintenance of the magnetron heads with direct electric cabinets
- Safe production due to absorbing chambers
- Including adjustable opening channel
- Microwave power can be adjusted easily to throughput
- Required length in forming line 7.5 to 10 m
- Installed power 450/900 kW
- Preheating power 360/720 kW

DIEFFENBACHER GMBH
Maschinen- und Anlagenbau
Heilbronner Straße 20
75031 Eppingen, Germany
Phone +49 7262 65-0
wood@dieffenbacher.com
www.dieffenbacher.com

DIEFFENBACHER

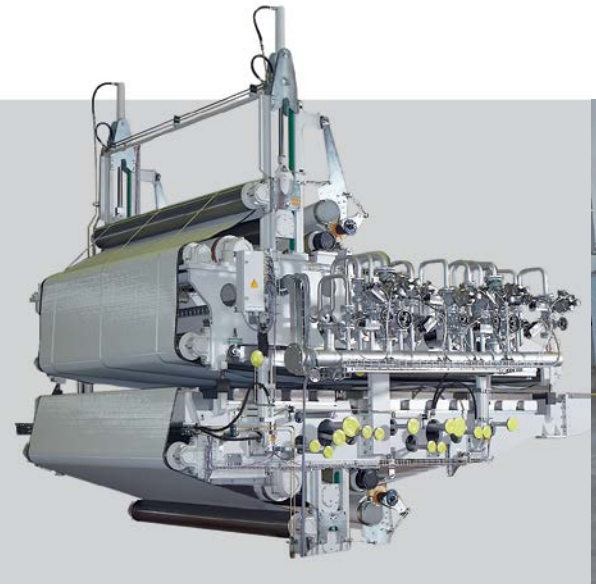

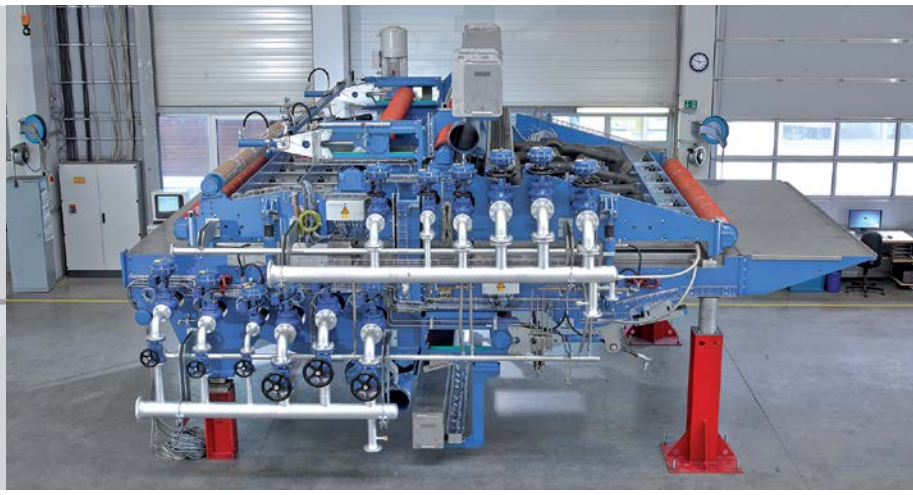

Steam Preheater

Application

PB, MDF and OSB board production

Description

Increase of capacity achieved by a higher mat temperature which will be reached by saturated (slightly overheated) steam that is injected directly into the mat in front of the hot press.

Customer benefits

- Increase of production capacity up to 40 %
- High efficiency concerning production increase especially when producing light boards with low heat transfer in the hot press during the pressing procedure
- High reliability regarding a continuous performance of the steam preheater
- Even better density profiles can be achieved by setting each track to a specified amount of steam
- Long lifetime of the mesh-belts due to less friction between the slotted steam plates
- Fast assembly and start-up due to completely preassembled top and bottom units

Technical features

- Width adjustment and low steam losses are possible by activating or deactivating different tracks on the slotted steam plates
- High efficiency in steam consumption due to operation with low steam losses, achieved by hydraulic thickness control (high pressing forces)
- Typical steam consumption 1 to 1.5 t/h
- High reliability and long lifetime of the mesh-belts due to a special driven belt roller and belt tensioning system with high torque and minimum belt tension
- Condensation spots on the board surface are avoided by a preheating system for the mesh-belts
- Required length 5 to 6.5 m replacing transfer belt

DIEFFENBACHER GMBH
Maschinen- und Anlagenbau
Heilbronner Straße 20
75031 Eppingen, Germany
Phone +49 7262 65-0
wood@dieffenbacher.com
www.dieffenbacher.com

DIEFFENBACHER

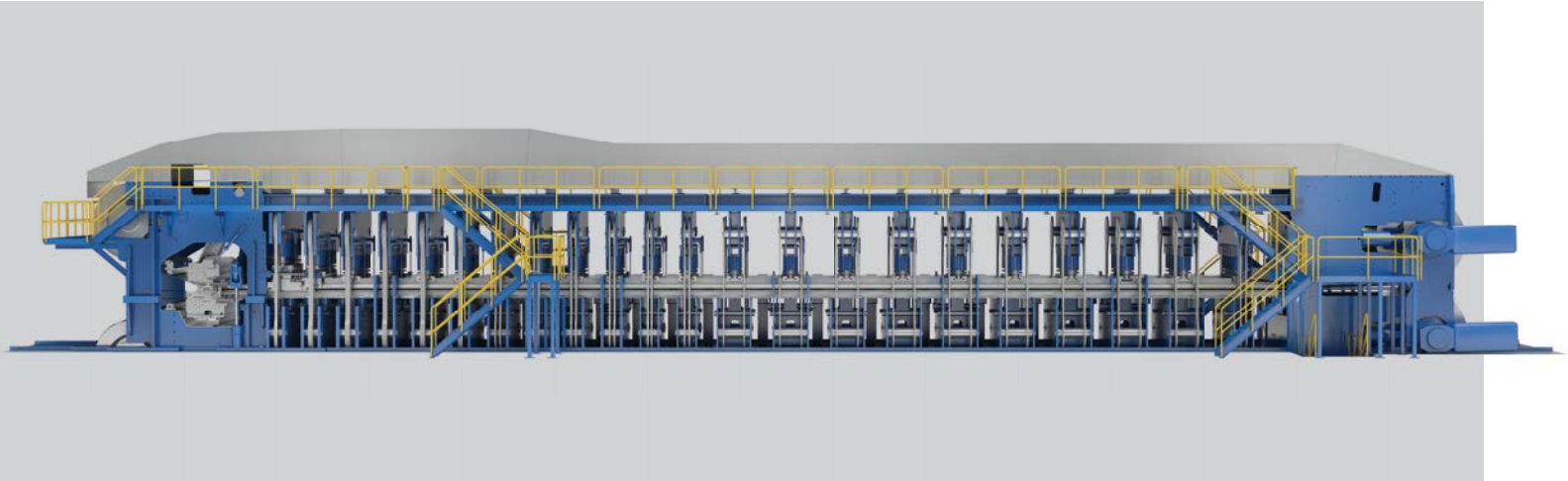

CPS+

Application

PB, MDF, OSB and LVL board production

Description

Continuous production of particle boards, OSB, MDF and LVL with accurate and constant pressure and temperature.

Customer benefits

- Low sanding allowance due to the double hinge infeed system
- Optimal thickness tolerances due to proven CPS+ Thickness-Control-System
- Low glue consumption due to Parallel Press Gap System
- Thermal entrainment allows fast heating up and changes during production due to movable frame system
- Offset placed cylinders homogenize board's surface
- Lifetime heating platen concept with separate protection platens

Technical features

- Double hinge infeed system for best de-aeration and simultaneous fast pressure build-up
- Parallel Press Gap System
- Special multipot cushion with "push" and "pull" functions and additional edge controller
- CPS+ thickness control with flexible setup for all board requirements
- Docking of upgrades (e.g. preheating systems) prepared
- Speed range up to 2,500 mm/s
- Board thickness 1.5 – 80 mm
- Finished board width 1.2 m, 1.8 m, 2.1 m, 2.4 m, 2.7 m (4 ft, 6 ft, 7 ft, 8 ft, 9 ft)
- Typical width variation 0.6 m (2 ft)

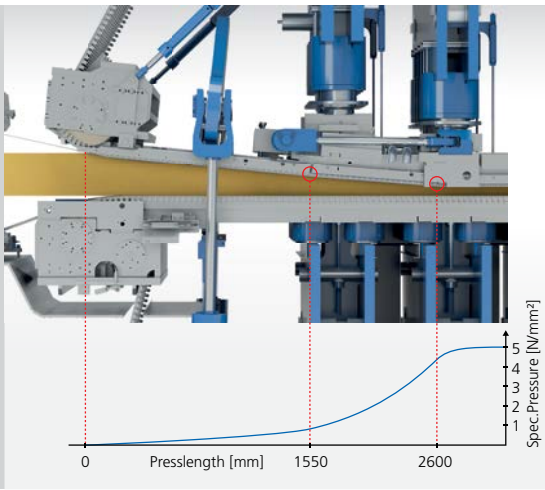

Fast pressure build-up for high bending strength and good surface quality due to double hinge infeed system.

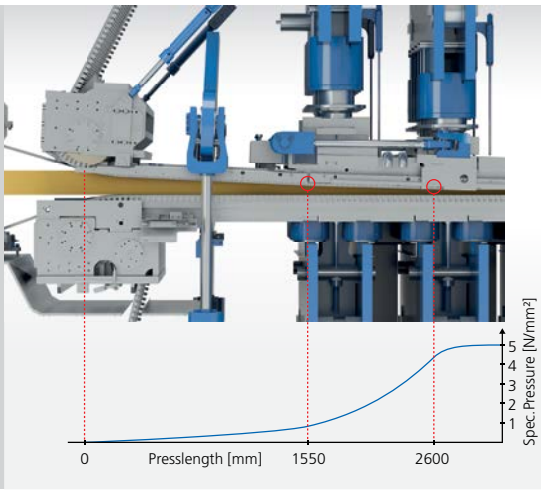

Smooth de-aeration at high speed thin board production and fast pressure build-up due to double hinge infeed system.

Parallel Press Gap System (PPS)

Sustained pressure continuity – Dieffenbacher standard since 1999

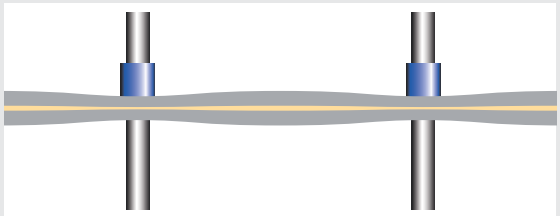

without Parallel Press Gap System (ContiPlus)

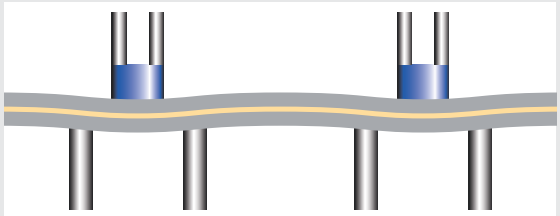

with Parallel Press Gap System (CPS+)

Characteristics

- Heating platens' thickness, number of cylinders lengthwise and frames' distances are well balanced
- Cylinders' forces and heating platens' counteracting forces are being absorbed lengthwise-offset

Benefits

- Minimum press gap variation between the frames
- Even pressure distribution:
  - for low glue consumption
  - for best thickness tolerances
  - for towering surface quality

DIEFFENBACHER GMBH
Maschinen- und Anlagenbau
Heilbronner Straße 20
75031 Eppingen, Germany
Phone +49 7262 65-0
wood@dieffenbacher.com
www.dieffenbacher.com

DIEFFENBACHER

① Double hinge infeed system for fast pressure build-up

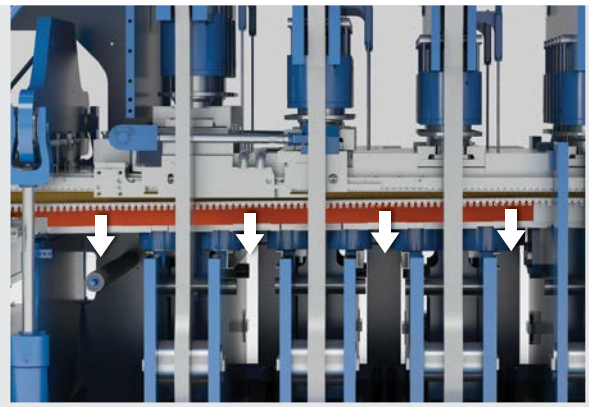

② Press infeed protection detects undesirables and stops press instantly, and actively releases Multipots

③ Multiple pull-funct
via mat's edges

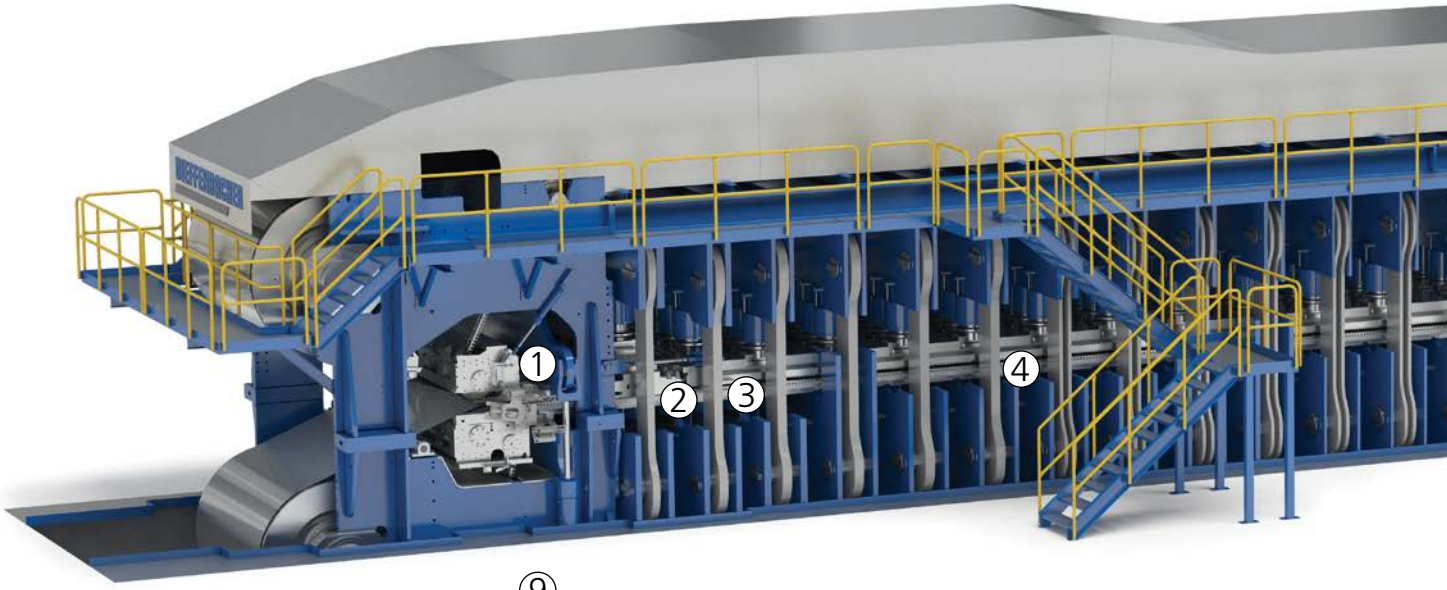

⑨

CPS+

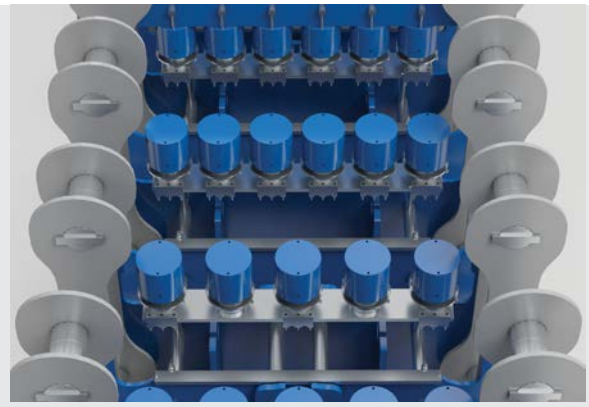

⑥ Offset placed cylinders homogenize board's surface

⑦ Entrainment while
temperature changes

ion for de-aeration

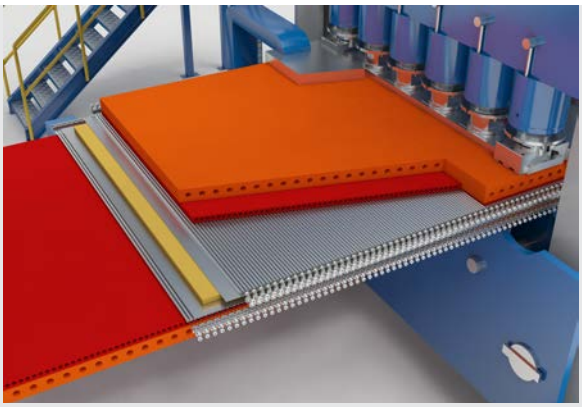

④ Heating platens with protection platens – first of them is heated for fast temperature build-up

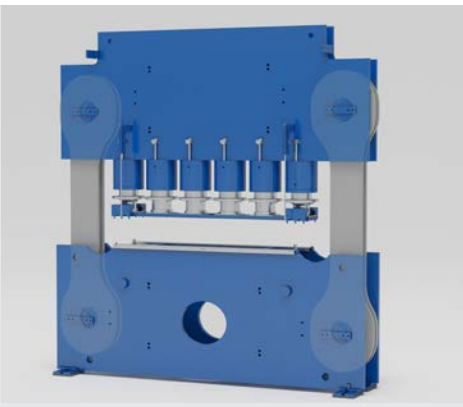

⑤ Modular frame construction for quick installation and easy access

thermal expansion – unrestricted during production

⑧ Strictly aligned supply side for easy access to inner parts from opposite maintenance side

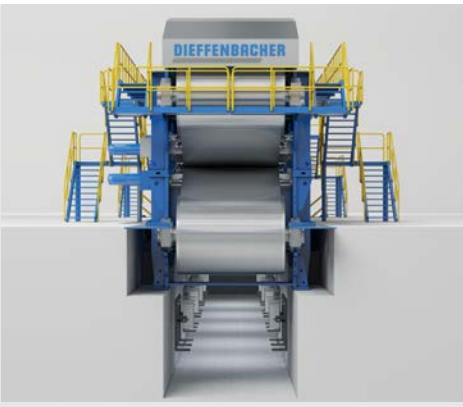

⑨ Valve blocks easily accessable in cool surroundings

ContiPlus 4 ft

Application

MDF/HDF, PB and OSB board production

Description

Continuous pressing of mat with accurate pressure and temperature control. It is designed for efficient production, energy saving, high raw material utilization, a good and stable product and flexible product specifications.

Customer benefits

- Flexible hinge press infeed system
- Hydraulic system beside the press for easy maintenance
- High precision of pressure and thickness control
- Accurate control for temperatue distribution
- Efficient press cleaning system for secure operation

Technical features

- Press length between 33.5 and 53.9 m (depending on line capacity)
- Max. speed 1,200 mm/s
- Driving drum diameter Ø 2,250 mm
- Advanced electric control system
- Board thickness range 2.5 – 25 mm (MDF) and 9 – 35 mm (PB)
- Raw board width max. 1,300 mm

Economic analysis ContiPlus 4 ft vs. Multi-Opening Press/MOP (see page 98)
400 m³/d 16 mm MDF, density 730 kg/m³

Item	MOP	ContiPlus	RMB / m³
Wood fiber (trimming and sander dust)	162.00	91.00	71.00
Glue and chemicals	124.00	71.00	53.00
Additional power (Refiner and sanding)	24.60	15.30	9.30
Sanding belt consumption	3.70	2.00	1.70
Lubrication oil of continuous press	–	2.00	-2.00
Production cost difference	–	–	133.00
Sales price difference	–	70.00	70.00
Efficiency difference RMB / m³			203.00
Annual efficiency calculated output 120,000 m³			24 million
Modernization investment			47 – 60 million
	ROI in 2 – 3 years!		

DIEFFENBACHER Group
Shanghai Wood-Based Panel Machinery Co., Ltd.
No. 299, Hejing Road, Anting
Shanghai 201805, P.R. China
Phone +8621 5957 7480
swpm@swpm.cn
www.swpm.cn

CSS Continuous Steam Press System

Application

Wood fiber insulation board production (WFIB)

Description

Press system for the manufacture of wood fiber insulation boards with high precision pressure and temperature control

Customer benefits

- Environmentally friendly production process
- Wide range of possible board density
- High temperature due to the use of steam
- Low energy consumption
- Less mat trimming

Technical features

- With simultaneous steam application at the upper and lower surface for a symmetric density profile of the board
- Quick curing due to steam
- Space-saving design
- Density range 40 – 240 kg/m³
- Thickness range 10 – 250 mm
- Typical production width 1.2 m, 1.8 m, 2.4 m (4 ft, 6 ft, 8 ft)

Wood Fiber Insulation Board Production

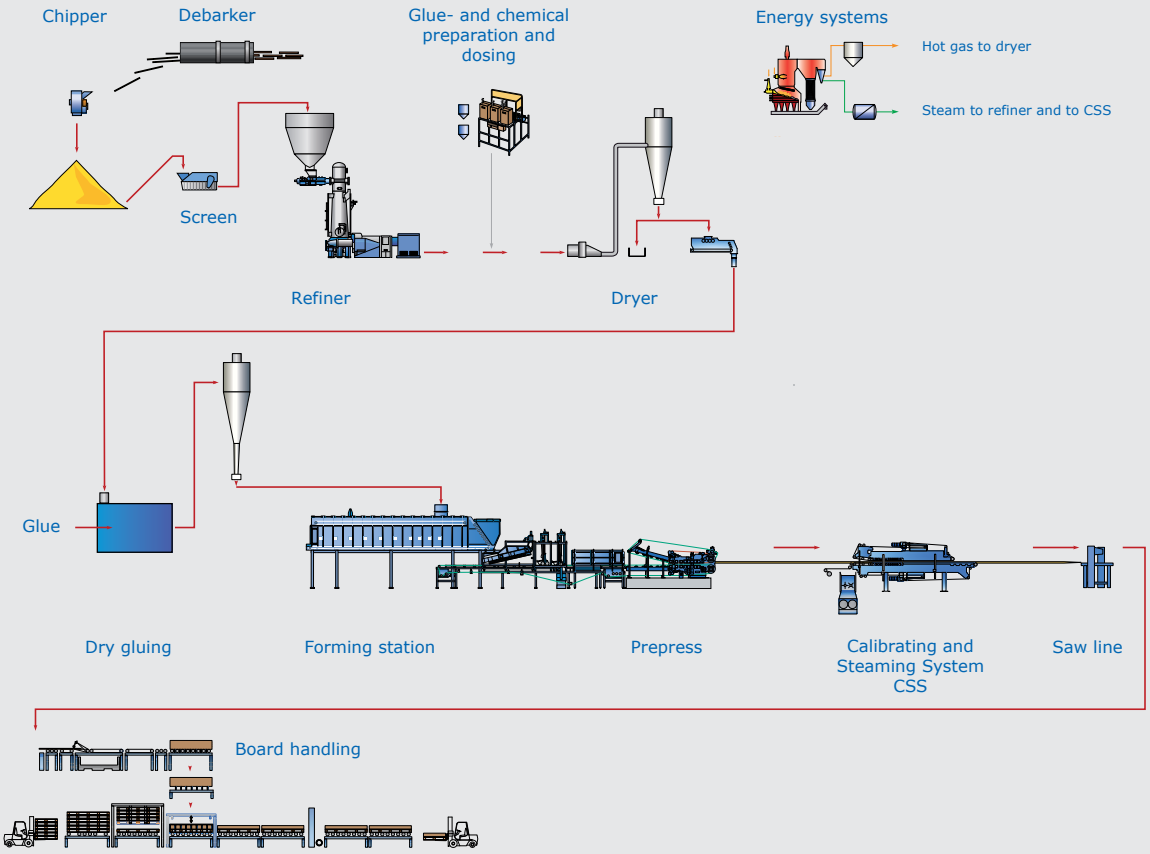

DIEFFENBACHER GMBH
Maschinen- und Anlagenbau
Heilbronner Straße 20
75031 Eppingen, Germany
Phone +49 7262 65-0
wood@dieffenbacher.com
www.dieffenbacher.com

DIEFFENBACHER

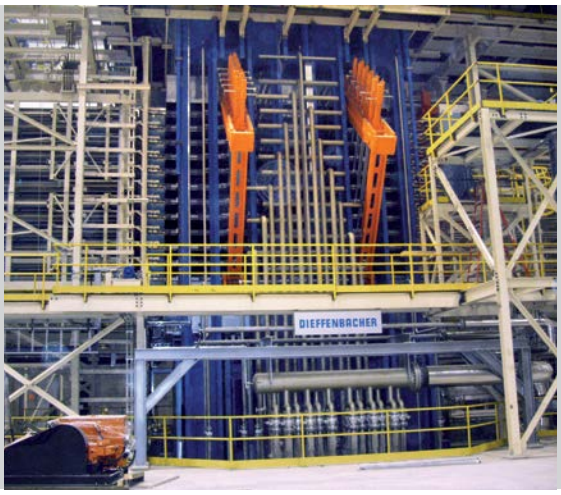

Multi-Opening Press

Application

OSB, MDF and PB board production

Description

Press system for the manufacture of PB, MDF and OSB with precision pressure and temperature control for large formats

Customer benefits

- High compression speeds result in sound board properties
- Steam venting enables degassing of wider presses and results in desirable board properties
- High position accuracy by advanced hydraulics and state of the art controls
- Easy and multifunctional control of the press
- Easy access to every press part and hydraulic system

Technical features

- Simultaneous closing device with maintenance free bushing design
- Rigid design of the press, especially the press frames and the forged cylinders
- Press design conventional or modular
- Total nominal pressure up to 200,000 kN
- Design capacity up to 1,152 MMsft/a (on basis 3/8 inch board thickness)
- Board thickness 10 – 50 mm (0.4 – 2 inches)
- Finished board width max. 4 m (13 ft)
- Finished board length max. 8 m (26 ft)

DIEFFENBACHER GMBH
Maschinen- und Anlagenbau
Heilbronner Straße 20
75031 Eppingen, Germany
Phone +49 7262 65-0
wood@dieffenbacher.com
www.dieffenbacher.com

DIEFFENBACHER



Multi-Opening Hot Press System

Application

Producing MDF/HDF/PB board via hot-pressing process

Description

MDF/HDF/PB multi-opening hot press system with capacities of 30,000 – 150,000 m^3/a and complete hot-pressing process via precise pressure and temperature control.

Customer benefits

- Stationary loader for reliable and stable board loading system
- Easy operation and maintenance
- Project investment with a feasible short payback period

Technical features

- High quality frame, oil cylinders, hot platens for uniform pressure and temperature distribution
- Visualization system for electric control available
- Design capacity max. 150,000 m^3/a
- Total nominal pressure up to 50,000 kN
- Board thickness 8 – 25 mm
- Finished board width 1.2 m, 1.8 m, 2.4 m (4 ft, 6 ft, 8 ft)
- Finished board length 2.4 m, 3.6 m, 4.8 m, 5.4 m (8 ft, 12 ft, 16 ft, 18 ft)

DIEFFENBACHER Group
Shanghai Wood-Based Panel Machinery Co., Ltd.
No. 299, Hejing Road, Anting
Shanghai 201805, P.R. China
Phone +8621 5957 7480
swpm@swpm.cn
www.swpm.cn

DIEFFENBACHER SWPM

HPL Hot Press Group

Application

High pressure hot/cold pressing of HPL boards

Description

Assembled impregnated paper will be transported to hot press for pressing to final HPL laminates.

Customer benefits

- Uniform pressure and temperature distribution
- Easy operation and maintenance

Technical features

- High quality frame, oil cylinders and hot platens
- Visualization system for electric control available
- Max. specific pressure 120 kg/cm^2
- Finished board width 1.2 m, 1.5 m, 1.8 m, 2.1 m (4 ft, 5 ft, 6 ft, 7 ft)
- Finished board length 2.4 m, 2.7 m, 3.0 m, 3.6 m, 4.0 m (8 ft, 9 ft, 10 ft, 12 ft, 14 ft)

DIEFFENBACHER Group
Shanghai Wood-Based Panel Machinery Co., Ltd.
No. 299, Hejing Road, Anting
Shanghai 201805, P.R. China
Phone +8621 5957 7480
swpm@swpm.cn
www.swpm.cn

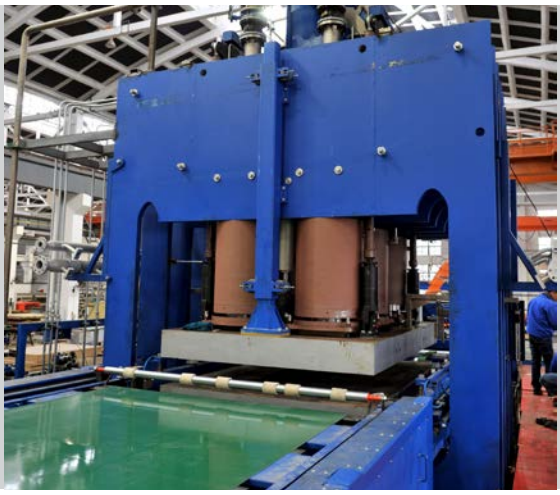

Short Cycle Laminating Press

Application

Lamination of MDF, HDF, PB board with impregnated paper for surface decoration and furniture production

Description

Assemble raw boards with impregnated paper and transport to hot press for short cycle hot pressing to manufacture laminated boards

Customer benefits

- High output due to short cycle process
- Low setup effort due to automatic configuration
- Easy operation and maintenance

Technical features

- High quality frame, oil cylinder, hot platen for uniform pressure and temperature distribution
- Visualization system for electric control available
- Semi-automatic and full automatic configuration
- Max. 150 pressing cycles per hour
- Finished board width 1.2 m, 1.8 m, 2.1 m (4 ft, 6 ft, 7 ft)
- Finished board length 2.4 m, 2.7 m, 3.6 m, 4.0 m (8 ft, 9 ft, 12 ft, 14 ft)

DIEFFENBACHER Group
Shanghai Wood-Based Panel Machinery Co., Ltd.
No. 299, Hejing Road, Anting
Shanghai 201805, P.R. China
Phone +8621 5957 7480
swpm@swpm.cn
www.swpm.cn

DIEFFENBACHER SWPM

Press Exhaust System

Application

Efficient press suction and cleaning of exhaust gases to comply with local environmental standards

Description

The Press Exhaust System cleans exhaust gases from the press through a washing process. Dust and condensable fractions of exhaust gases are bound to fine water droplets. In the subsequent cyclone these solid and liquid parts are separated. Additional equipment can be supplied to catch water soluble VOCs (volatile organic compounds)/HAPs (hazardous air pollutants), in particular formaldehyde.

Customer benefits

- The fluid optimized system means low operating costs
- Additional energy savings feasible with use of a Low Pressure Drop Scrubber
- Reduction of VOCs and formaldehyde with built-in equipment (optional)
- Low fresh water demand
- Low space requirement

Technical features

- Variably adjustable venturi throat to optimize separation efficiency
- High efficiency separator
- High solid content in sludge discharge
- Low pressure drop components in entire system
- Special non-sensitive nozzles to prevent contamination with particles
- Function electronically visualized and monitored at the control room

Press Exhaust System

Type		NE 35	NE 55	NE 75	NE 90	NE 120	NE 150	NE 180
Product		for OSB / PB / MDF						
Exhaust volume, nominal	am^3/h	35,000	55,000	75,000	90,000	120,000	150,000	180,000
Exhaust volume, minimal	am^3/h	26,700	39,400	59,300	81,700	94,800	135,500	159,500
Exhaust volume, maximal	am^3/h	39,400	59,300	81,700	94,800	135,500	159,500	190,300
Exhaust temperature, approx.	°C	30						
Fresh water consumption*, approx.	m^3/h	1...2						
Recirculated water amount, approx.	m^3/h	120						
Installed electric power at pumps	kW	22 + 11						
Effective electric power requirement at pumps	kW	18 + 8						
Installed electric power at radial fan	kW	75 – 90	90 – 132	132 – 200	200 – 250	250 – 315	315 – 355	355 – 450
Effective electric power requirement at radial fan	kW	51 – 75	75 – 113	113 – 156	156 – 181	181 – 259	259 – 305	305 – 363

* heavily dependent on ambient conditions

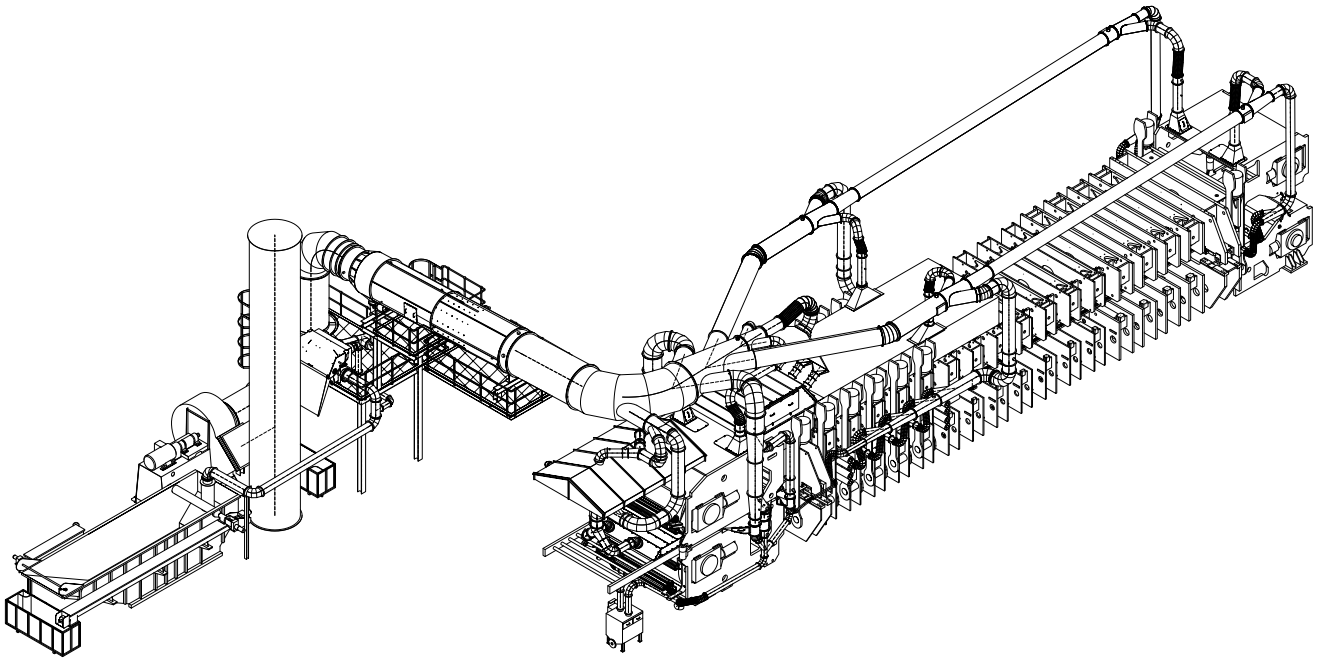

DIEFFENBACHER GMBH
Maschinen- und Anlagenbau
Heilbronner Straße 20
75031 Eppingen, Germany
Phone +49 7262 65-0
wood@dieffenbacher.com
www.dieffenbacher.com

Branch office Leverkusen:
Maybachstraße 35
51381 Leverkusen, Germany
Phone +49 2171 3996-0

Dryer Emission Control System

Application

Efficient cleaning of exhaust gases from dryers to comply with local environmental standards

Description

The Dryer Emission Control System cleans exhaust gases by using a scrubber. Water droplets accrued in a venturi throat trap fine particulates. These solid and liquid parts are separated in the subsequent cyclone. Additional equipment can be supplied to catch water soluble VOCs (volatile organic compounds)/HAPs (hazardous air pollutants), in particular formaldehyde.

Customer benefits

- Immune to fluctuating quantity of gases at constant separation efficiency
- Adjustable emission control into submicron range
- High solid content in sludge discharge
- Reduction of VOCs and formaldehyde with built-in equipment
- Low space requirement

Technical features

- High efficiency separator means low water consumption
- Variable amounts of gas can be processed
- Liquid distribution in venturi head via open pipes rather than nozzles, thus no clogging
- Adjustable emission control via steplessly variable venturi throat
- Recirculation of scrubbing liquid with high solid content

DIEFFENBACHER GMBH
Maschinen- und Anlagenbau
Heilbronner Straße 20
75031 Eppingen, Germany
Phone +49 7262 65-0
wood@dieffenbacher.com
www.dieffenbacher.com

Branch office Leverkusen:
Maybachstraße 35
51381 Leverkusen, Germany
Phone +49 2171 3996-0

Pneumatic Systems

Application

- Dust extraction
- Material transport
- Emission control

Description

Pneumatic systems are optimal solutions for dust extraction and material transport in wood processing and wood-based panel industries for wood flakes, fibers, strands and dust. The fluid optimized systems consist of fans, blowers, cyclones, rotary valves, high grade impulse filters and ductwork.

Customer benefits

- Individual solutions with customized installations
- State-of-the-art design
- High safety standards
- Energy optimized installations
- Feasible for all climate conditions

Technical features

- Reduced pressure drop due to optimized design
- Additional energy savings feasible by use of Low Pressure Drop Cyclones
- Jet filter units with maximum operation reliability
- ATEX conformity to highest standards
- High efficiency components

DIEFFENBACHER GMBH
Maschinen- und Anlagenbau
Heilbronner Straße 20
75031 Eppingen, Germany
Phone +49 7262 65-0
wood@dieffenbacher.com
www.dieffenbacher.com

Branch office Leverkusen:
Maybachstraße 35
51381 Leverkusen, Germany
Phone +49 2171 3996-0

DIEFFENBACHER

OVERVIEW

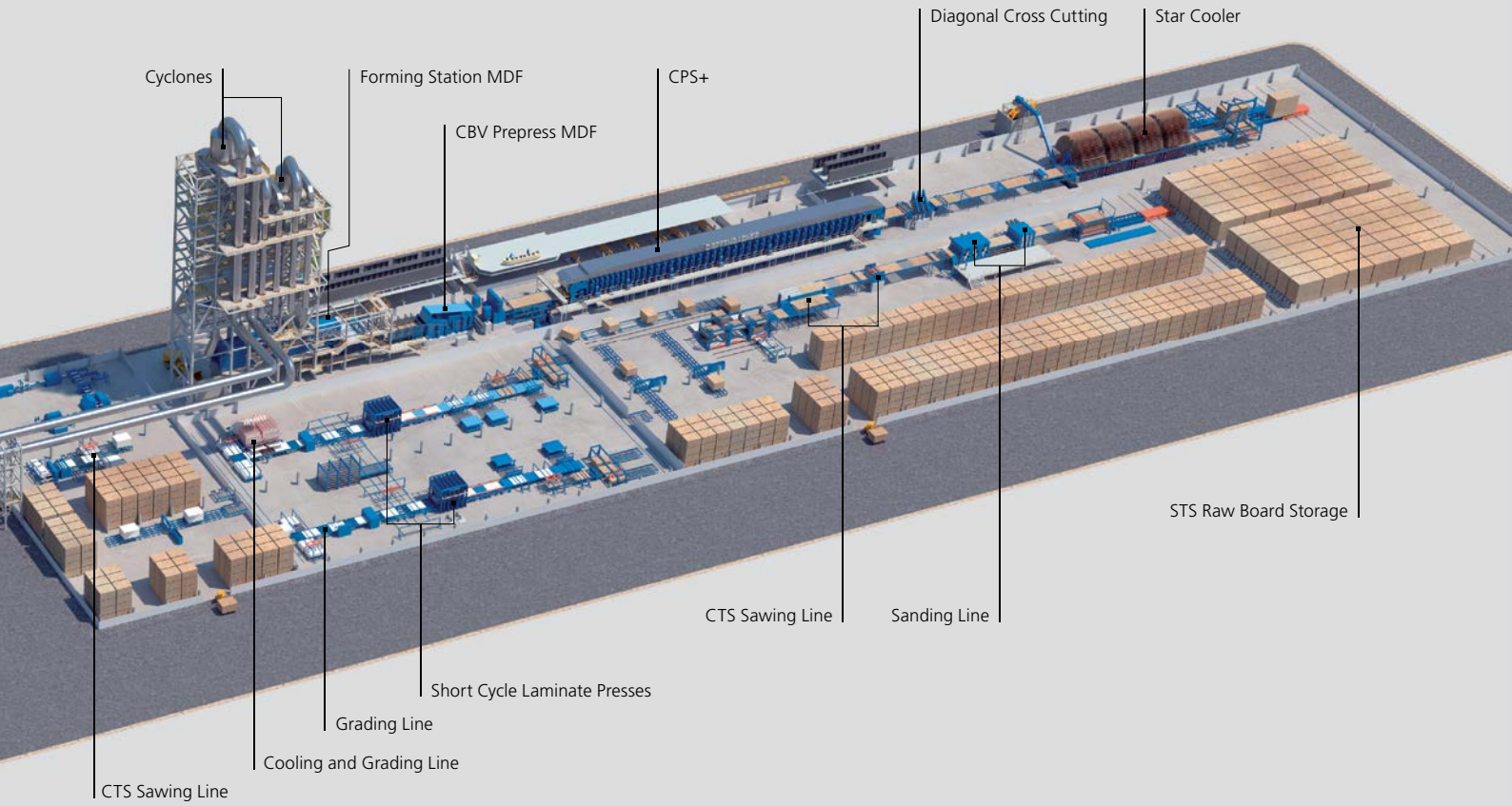

CPS+

Page 92

Raw Board Handling

Page 107

Lukki Raw Board Storage

Page 109

or

STS Raw Board Storage

Page 108

Sanding Line

Page 110

Panel Sawing Line

Page 111

or

CTS Sawing Line

Page 112

Strapping / Packing Line

Page 113

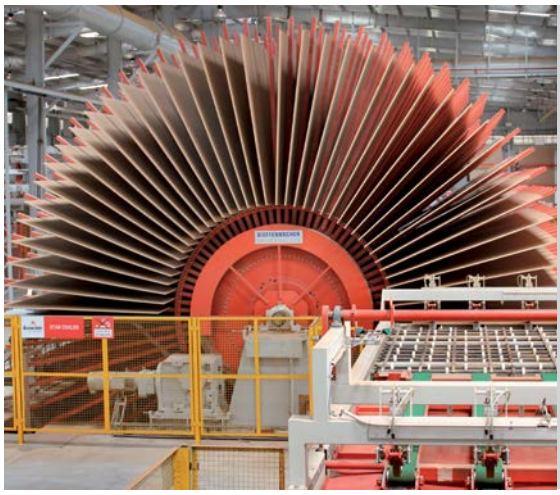

Raw Board Handling

Application

For handling PB, OSB, MDF and THDF production

Description

Raw Board Handling provides the tools for reliable panel production with a straight forward process designed for continuous high speed operation. The line starts with trimming and cross cutting saws, followed by board property control equipment. Reject panels are removed prior to the cooling wheels which lower board temperature. Continuous stacking occurs with automatic product change.

Customer benefits

- Reliable operation ensures higher up-time
- Secure process to minimize down-grade
- Accurate cutting to maximize yield
- Fully automatic to minimize manual operations
- Heavy duty construction to ensure long life-time

Technical features

- Edge trimming with four saw units
- Cross cutting with two to four saw units depending on the cycle-time
- Reject handling with board breaker or by stacking
- Number of cooling wheels according to line's design capacity
- Stacking for raw board storage

DIEFFENBACHER PANELBOARD OY
Wipaktie 1
15560 Nastola, Finland
Phone +358 10 572-9000
dpf@dieffenbacher.com
www.dieffenbacher.com

DIEFFENBACHER

STS Raw Board Storage

Application

For storing PB, OSB and MDF stacks

Description

Fully automatic storage system for panelboard production. Master panel storage for main production prior to finishing and protection panels for finishing lines. Inventory management system with real-time stack information and inventory reports.

Customer benefits

- Efficient use of storage area
- High transfer capacity due to “big” stack size
- Fully automatic to avoid manual operations

Technical features

- Consist of a main wagon and two satellite wagons
- Main wagon makes the crosswise movements
- Satellite wagons lift the stacks up and down
- Satellite wagons travel lengthwise in the storage area

Technical data

- Stack weight approx. 60 t max.

DIEFFENBACHER PANELBOARD OY
Wipaktie 1
15560 Nastola, Finland
Phone +358 10 572-9000
dpf@dieffenbacher.com
www.dieffenbacher.com

DIEFFENBACHER

Lukki Raw Board Storage

Application

For storing PB, OSB, MDF and THDF stacks

Description

Fully automatic storage system for panelboard production. Master panel storage for main production prior to finishing, downgraded panels after sanding and protection panels for finishing lines. Inventory management system with real-time stack information and inventory reports.

Customer benefits

- Efficient use of storage area
- Flexible operation because any stack at the top of storage place can be transferred
- Simple foundations
- Conventional stacking and feeding systems due to “small” stack size
- Fully automatic to avoid manual operations

Technical features

- Auxiliary wagon with conveyor for stack receiving and removal
- Auxiliary wagon makes the crosswise movements in the storage
- Lukki wagon lifts the stacks up and down from/to auxiliary wagon
- Lukki wagon makes the lengthwise movements in the storage
- Steel pallets are used to carry the stacks inside the storage

Technical data

- Stack weight approx. 20 t max.
- Stack height 2.5 m max., up to five full stacks per storage position

DIEFFENBACHER PANELBOARD OY
Wipaktie 1
15560 Nastola, Finland
Phone +358 10 572-9000
dpf@dieffenbacher.com
www.dieffenbacher.com

DIEFFENBACHER



Sanding Line

Application

For sanding PB, OSB, MDF and THDF boards

Description

The Sanding Line provides the tools for reliable panel production with a straight forward process. From the feeding station the panels are fed into the aligning conveyor prior to the sanding machine. After sanding, the panels are inspected visually or with automatic grading systems and conveyed to the stacking stations. When needed, protection panels are used while stacking. Panel Sawing Line (see page 111) or CTS Sawing Line (see page 112) can be directly connected in-line with Sanding Line.

Customer benefits

- Reliable process to ensure high up-time
- Heavy duty construction to ensure long life-time
- Fully automatic to minimize manual operations
- Gentle process to minimize down-grade

Technical features

- Possibility for non-stop feeding
- High speed feeding for thin panel operation
- Panel aligning to sanding machine center-line
- Automatic adjustments according to master panel dimensions
- Precise aligning devices at stacking stations
- Max. speed 120 m/min.

DIEFFENBACHER PANELBOARD OY
Wipaktie 1
15560 Nastola, Finland
Phone +358 10 572-9000
dpf@dieffenbacher.com
www.dieffenbacher.com

DIEFFENBACHER

Panel Sawing Line

Application

For sizing PB, OSB, MDF and THDF boards

Description

High capacity sawing system for standard panel sizes. Typically, the line is integrated into the Sanding Line. After aligning, the long edges of the panels are trimmed. For cross cutting the panels are pre-stacked to reach high capacity. Panel bundles are pulled through the cross cut saw to ensure squareness. When needed, panels are split after cross cutting. Several stacking stations for continuous stacking. When needed protection panels can be used while stacking.

Customer benefits

- Accurate cutting to maximize yield
- High capacity to minimize operating hours
- Reliable process to ensure high up-time
- Heavy duty construction to ensure long life-time
- Fully automatic to minimize manual operations

Technical features

- Saw units provided with scoring blades prior to main blades
- High speed pre-stacking before cross cutting
- Panel aligning systems for cross cutting
- Automatic adjustments according to cutting pattern
- Precise aligning devices at stacking stations

Technical data

- Panel bundle height for cross cutting 60 mm max.

DIEFFENBACHER PANELBOARD OY
Wipaktie 1
15560 Nastola, Finland
Phone +358 10 572-9000
dpf@dieffenbacher.com
www.dieffenbacher.com

DIEFFENBACHER

CTS Sawing Line

Application

For sizing PB, OSB, MDF and THDF boards

Description

Flexible book sawing system for standard and special panel sizes. Typically integrated into the Sanding Line. Non-stop book forming system for cutting. In the first phase the books are cut longitudinally, followed by cross cutting phase. Books are positioned by pusher units accurately for cutting according to the cutting pattern. After cutting occurs stacking for final stack height. When needed protection panels can be used while stacking.

Customer benefits

- Accurate cutting to maximize yield
- Flexible cutting patterns for market requirements
- Reliable process to ensure high up-time
- Heavy duty construction to ensure long life-time
- Fully automatic to minimize manual operations

Technical features

- Non-stop book forming
- Pusher units with AC-servo drives
- Saw units provided with scoring blades prior to main blades
- Plane saw tables covered with felt
- Automatic adjustments according to cutting pattern

Technical data

- Book height 200 mm max.
- Final product size 600 x 900 mm min.

DIEFFENBACHER PANELBOARD OY
Wipaktie 1
15560 Nastola, Finland
Phone +358 10 572-9000
dpf@dieffenbacher.com
www.dieffenbacher.com

DIEFFENBACHER



Strapping / Packing Line

Application

For packing PB, OSB, MDF and THDF stacks

Description

The final stacks are strapped and packed for dispatch. Depending on the market requirements, the line can also be provided with a plastic wrapping system, a longitudinal strapping system or with a crosswise strapping system. Additionally, there is the possibility for panel edge printing of product data or sticker application.

Customer benefits

- Flexible packing according to market requirements
- Reliable process to ensure high up-time
- Heavy duty construction to ensure long life-time

Technical features

- Vertical or horizontal axis plastic wrapping with stretch foil
- Manual or automatic longitudinal strapping with PE-band
- Semi-automatic or automatic crosswise strapping with PE-band
- Bottom runner feeding together with crosswise strapping
- Optional: Panel edge printing or sticker application
- Automatic adjustments according to packing pattern
- Ready stacks are removed by forklift truck

Technical data

- Capacity up to 30 stacks/h with a conveying speed of up to 20 m/min.
- Stack width range 1.2 – 2.6 m, master panel length range 1.8 – 5 m
- Stack height at stacking up to 1.5 m, stack weight at stacking up to 10 t

DIEFFENBACHER PANELBOARD OY
Wipaktie 1
15560 Nastola, Finland
Phone +358 10 572-9000
dpf@dieffenbacher.com
www.dieffenbacher.com

DIEFFENBACHER

Production close to our Customers

Always „Made by Dieffenbacher“

With a global production network across three continents, production at Dieffenbacher is close to our customers. No matter which production site, whether in Germany, the Czech Republic, the USA, Canada or China, production at Dieffenbacher always meets the highest quality standards.

This also means faster deliveries for our customers. Another benefit are price advantages due to more flexibility in purchasing materials, lower logistic costs, and the absence of customs duties, advantages that can directly be passed on to the customer.

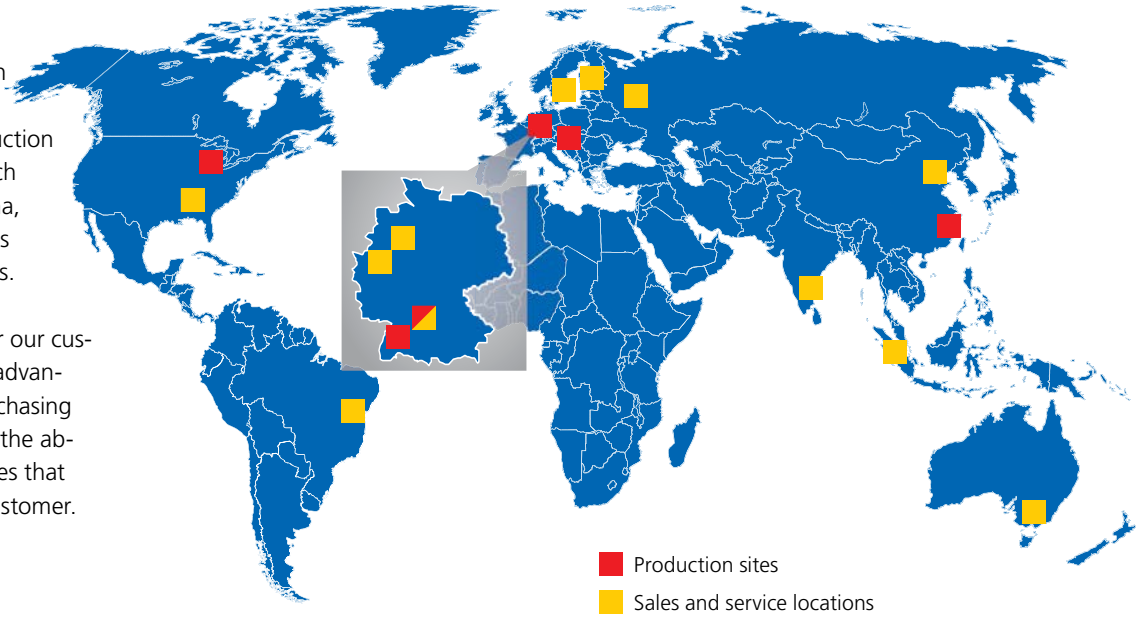

Eppingen, Germany

Karle & Jung, Germany

Windsor, Canada

Brno, Czech Republic

Shanghai, China

All information contained in this product catalog are based on our experience and our current knowledge and are for general orientation only, non-binding and not valid for all applications. The function, performance/output, consumption and savings potential of our products in particular depend on the individual factors of the intended use. Therefore, information and technical data cannot be considered valid in every application, nor do they contain any express or implied legal warranties or guarantees. We recommend discussing specific applications with our sales service. Due to continuous product optimization we reserve the right to change our products and this product catalog as well as in individual product information at any time without prior notice. All previous product catalogs and individual product information become invalid upon the release of later publications.

© Dieffenbacher GmbH Maschinen- und Anlagenbau, Eppingen. All rights reserved.

DIEFFENBACHER

DIEFFENBACHER GMBH
Maschinen- und Anlagenbau
Heilbronner Straße 20
75031 Eppingen, Germany
Phone +49 7262 65-0
Fax +49 7262 65-377
wood@dieffenbacher.com
www.dieffenbacher.com

05/2015